DAMON Industry



Conveyor Roller

Catalogue

www.damonroller.com

Version：202601V1(1)

Damon Industry 德马工业

Rolling Guaranteed

ABOUT DAMON INUSTRY



ONE OF THE GLOBAL LEADING MANUFACTURER OF CONVEYOR ROLLERS

Damon Industry provides millions of rollers all over the world every year for many industries. With professional experience for decades, Damon Industry provides support for global companies to achieve efficient logistics.

Zhejiang Damon Industrial Equipment Co. Ltd, since its establishment in 2004, has always been committed to providing the highest quality conveyor rollers and services for a wide range of industries.

Damon Industry conveyor rollers are used in a variety of industries including food distribution, pharmacy, tobacco, clothing, postal express, logistics and distribution, manufacturing, rubber and airport industries. Damon Industry provides a vast range of reliable and innovative roller solutions. Our dedicated and experienced team of sales people and application engineers work with our clients to ensure the products are suitable for the application and help users improve efficiency and reduce costs.

Globally we have gained the consistent trust of our customers. These customers include influential equipment manufacturing companies and logistics system integrators. We provide customers with over 40 different categories products covering a variety of specifications to suit customers' different requirements.

Damon Industry has manufacturing bases in Asia, Europe, America and Australia, and providing customers a wide range of services such as localized manufacturing, sales and service.

With a strong global presents, Damon Industry will continue to expand and pursue a deeper market share. From introduction of complete information based ERP management system to the independent research and development of the online roller drawing system and then launched 24 h online service, we are viewing our market from a brand new perspective and are willing to share our ideas of quality and innovation with every customer.

Damon Industry was awarded "The Most Innovative Brand" in the industry of Chinese logistics equipment. Damon Industry was also selected for the "Chinese Green Warehousing and Distribution Technology & Equipment" recommended directory. We will always focus on supplying outstanding conveyor roller solutions to local and global customers.

With the starting point of "creating competitiveness for customers' logistics systems", the company is moving towards the vision of "building Damon Industries into the most influential provider and service provider in the field of core components of global logistics equipment".

CONTENTS

Roller Overview 02–13

Conveyor Roller Selection ... 02

Load Capacity ... 04

Run Out ... 04

Tube ... 05

Shaft ... 08

Bearing ... 10

Roller Part Number (order code) ... 11

Dimensional Drawing Download ... 12

Additional Design Information ... 13

Gravity Conveyor Roller Series 14–33

1900 series light duty conveyor roller ... 16

1100 series light/medium duty conveyor roller ... 18

1200 series universal conveyor roller ... 23

1800 series medium/heavy duty conveyor roller ... 28

Driven Conveyor Roller Series 34–67

2230/2240 series single/double grooved O–belt conveyor roller ... 36

2260 series double groove O–belt pulley conveyor roller ... 42

2250 series poly–vee conveyor roller ... 46

2890M series medium–duty poly–vee conveyor roller ... 50

2280 series timing belt pulley conveyor roller ... 53

2214/2224 series polymer single/double sprocket roller ... 56

2411/2421 series steel single/double sprocket roller with polymer bearing housing ... 59

2311/2321 series steel single/double sprocket roller with steel bearing housing ... 63

Accumulating Conveyor Roller Series 68–77

3214/3224 series polymer single/double sprocket accumulating roller ... 70

3211/3221 series steel single/double sprocket accumulating roller ... 72

3816/3826 series steel single/double sprocket adjustable accumulating roller ... 74

Curve Conveyor Roller Series 78–99

1600 series gravity tapered sleeve roller ... 80

2640 series double grooved tapered sleeve roller ... 84

2660 series O–belt wheel tapered sleeve roller ... 87

2650 series poly–vee tapered sleeve roller ... 90

2624 series polymer sprocket tapered sleeve roller ... 93

1500 series gravity steel tapered roller ... 95

2521 series sprocket steel tapered roller ... 97

Components 100–107

Ball transfer ... 100

Skate wheel ... 104

Floway wheel track ... 106

Adjustable foot ... 107

Conveyor Roller Selection

Is the product suitable for a roller conveyor?

Products:

A Product with a hard and flat bottom surface such as cardboard, flat bottom plastic boxes, metal work bins, wooden pallets, etc. are suitable for roller conveyors. Product with a bottom surface that is soft or irregular such as soft boxes, handbags, components with an irregular bottom etc. are not suitable to be conveyed on a roller conveyor.




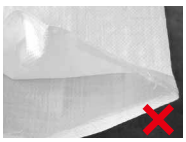


⚠ Objects with a small contact surface i.e. point contact or line contact, may damage the roller (localized abrasion, damage to the tapered sleeve, etc.)

Environment:

1.Plastic components are fragile at low temperatures. Different series rollers are suited to different temperatures (check characteristics for each series). When exceeding the specified temperature range, please contact us for advice.

2.In some circumstances of powder production, rubber lagged rollers cannot be used in a dustless environment.

3.Polyurethane absorbs colours easily and may not be suitable for transporting coloured packages or goods.

Roller Length:

The suitable length of the roller should be selected according to the width of the product (length of roller surface, indicated by W). For straight conveying, calculate according to the formula below:

W=B+△B

In the formula: **B** — width of goods

△B — width allowance, typically add 50 ~ 150 (mm)

⚠ For curved conveying, please refer to P78 for roller length selection.

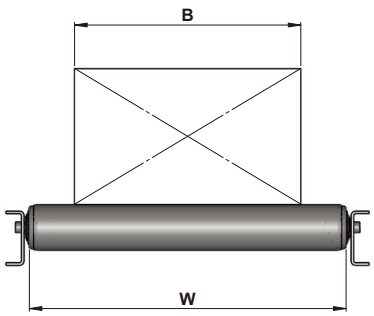

For goods with a very hard, sturdy base, where safety and normal conveying is not compromised, the width of the goods can exceed the length of the roller i.e. W≥0.8B.

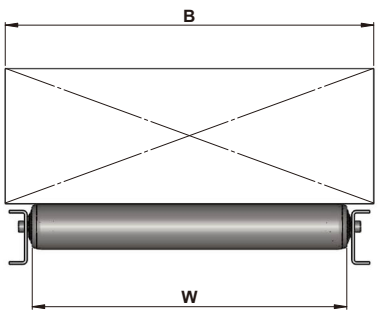



Roller Pitch Selection:

To ensure the steady conveying of goods, the principles of selecting the correct roller pitch (roller centre distance, indicated by T) is a minimum 3 rollers to support the goods at any moment, i.e. T≤1/3L.

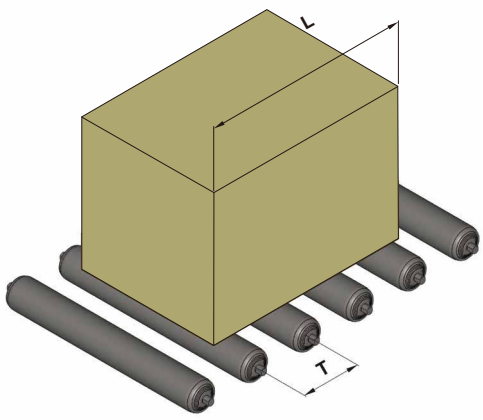

1.Products that require steady conveying, use T = 1/4 ~ 1/5 L or smaller.

2.For flexible, long and thin products, you need to check the deflection of the product. The product deflection should be less than 1/500 of the roller pitch otherwise it will greatly increase the running resistance.

3.The pitch of double sprocket conveyors must be calculated in multiples of 1/2 the chain pitch. For details refer to P52.

4.The pitch of poly-vee rollers is limited by the type of poly-vee roller. For details refer to P47.

The loading on each individual roller must not exceed its maximum static loading (This loading refers to a uniformly distributed load without impact. If applying concentrated loading, the safety index will need to be increased).

Different Conveying Modes:

1.Gravity conveying: Manual pushing or declined roller bed:

◇ Polymer bearing housing: 1200 series

◇ Steel bearing housing: 1100, 1800 series

2.Driven conveying: AC gear motor drive or motor roller drive:

◇ O-belt conveyor roller: 2240, 2260 series

◇ Poly-vee conveyor roller: 2250 series

2890M series（medium-duty poly-vee, steel bearing housing）

◇ Timing belt conveyor roller: 2280 series

◇ Sprocket conveyor roller:

2214/2224 series (polymer sprocket, polymer bearing housing)

2411/2421 series (steel sprocket, polymer bearing housing)

2311/2321 series (steel sprocket, steel bearing housing)

3.Accumulating conveying: Motor drive. The product needs to accumulate on the conveyor line:

◇ Friction driven accumulation:

3214/3224 series (polymer sprocket)

3211/3221 series (steel sprocket)

◇ Adjustable accumulation: 3816/3826 series (steel sprocket)

4.Curve conveying:

◇ Plastic tapered roller:

1600, 2640, 2660, 2650, 2624 series

Load Capacity

The main factors which determine the roller load capacity are the tube, shaft and bearing. The load capacity is dictated by the weakest of them:

1.Excessive load will distort the tube during roller operation which may result in permanent damage leading to unstable conveying of the product.

2.If the load capacity of the shaft is insufficient, it will change the adaptive capacity of the shaft and influence the running performance.

3.If the load exceeds the permitted load of the bearing, it will greatly reduce the bearing's lifespan.

You need to know the following design information:

1.The rated load capacity of a single roller is the uniformly distributed load on the roller surface (not point load).

2.The method of mounting the shaft to the conveyor frame. For example a internal threaded shaft has a higher load capacity than a loose mounted shaft such as a spring loaded shaft.

3.For each application, you need to consider how flat the product conveying surface is and any partial forces encountered during conveying.

4.Steel tube and stainless steel tube have similar mechanical properties with regards to load capacity so are typically considered to have same load capacity.

5.Increasing the thickness can strengthen the tube's impact resistance (not easy to dent), but has little influence on the roller's load capacity.

6.In some modes of conveying, especially in belt driven conveying, duty plays a decisive role rather than the load. The duty depends on the driving force such as belt maximum tension and chain tension.

⚠ Duty: Maximum conveying capacity of driven roller.
Load: Roller's maximum load capacity.

Run Out

Run out is the key factor in how smooth the roller runs. It will influence the stability and reliability of conveying. If the run-out is excessive, it will lead to product jolting, deviation from normal conveying direction, influencing the accuracy of conveying, causing higher noise levels and may even cause partial product damage or a reduction in the conveyor's lifespan.

Damon's conveyor rollers utilize high quality materials and strict manufacturing processes to ensure better run out performance than specified by JB/T 7012-2008.

Radial Run-out

Unit: mm

roller length	roller	tapered roller
100~500	0.5	0.7
>500~1000	0.6	0.9
>1000~1600	1.0	1.4
>1600~2000	1.2	/
>2000~2500	1.6	/

Remark: excludes PVC and grooved rollers

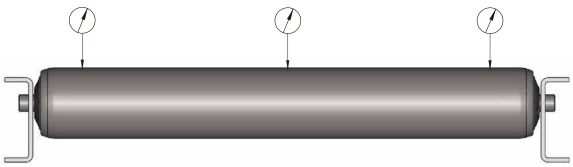

Choose the maximum data from the three points as the inspection data





Tube Material

Steel

Following the ongoing development of tube making and welding techniques, steel tubes with precision welding replace the hot rolled seamless tube and become the most commonly used material for conveyor roller manufacturing. Precision welding tube satisfies the requirements for mechanical properties and curvature, the advantage is appearance, balance and cost.

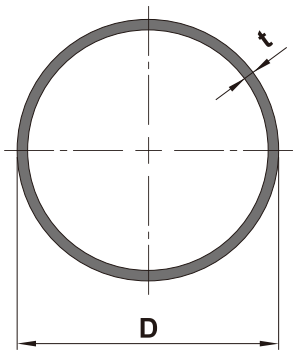

Aluminum

The hardness of aluminium alloy is only 1/3 in comparison to steel tube and stainless steel tube. It weighs only 36% of steel tube and features water proof and rust proof properties. It is suitable for light weight applications and wet working conditions. It is also specified in some industries e.g. rubber.

PVC

The load capacity of PVC tube is much lower than steel tube of the same diameter but has the following features:

1.Corrosion resistant, good chemical stability.

2.Easy cleaning.

3.The roller is light, easy start-up.

4.Low noise, shockproof.

Common tube size:

Unit: mm

D	t
Φ18	1.0
Φ25.6	1.0
Φ38	1.2
Φ48.6	1.5
Φ50	1.5
	2.0
Φ60	2.0
	3.0
Φ76	2.0
	3.0
	4.0
Φ80	2.0
	3.0
Φ89	3.0
	4.0

Stainless Steel

Welded stainless steel tube is a commonly used material for conveyor rollers. It has an attractive appearance, good corrosion resistance and is much more durable than common steel tube. The two most commonly used material numbers are as follows:

Material	304	J4-200
Magnetic	No	
Corrosion resistance	Excellent corrosion resistance to aqueous alkali and most organic acids and mineral acids.	Low corrosion resistance, only suitable for long periods in the common air polluted environment without chloride pollution, rust free.
Main application	Kitchen appliances, automobile parts, building materials, food production facility, hospital tools.	Mainly as decoration or replacement of zinc plated tube for some high temperature requirements.

We have used stainless steel 304 as an example only. If you have a requirement for J4-200, please contact us for code confirmation.

Tube Surface Treatment

Galvanized Magnesium Aluminum Zinc

Galvanized magnesium aluminum zinc for “zinc, aluminum and magnesium ternary alloy coating”. There’s a kind of alveolate structural organization in the coating, so it possesses favorable corrosion resistance, rub resistance and adhesive force. Owing to its strong advantage in performance and environment-friendly galvanizing technology, Galvanized Magnesium Aluminum Zinc pipes have gained popularity among and drawn the attention of the major industries.

1.More favorable rust resistance of the surface, capable of coping with various humid and severe environments.

2.Dispensing with re-galvanization and guaranteeing continuous delivery.

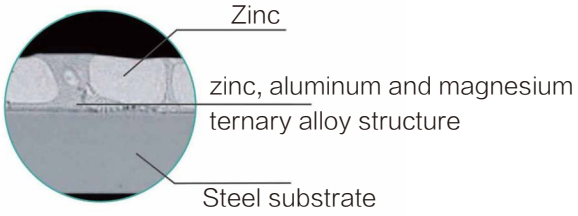

Zinc Plated

Forms a homogeneous, compact, well combined zinc coating through electrolysis. Compared with other metal, zinc is economic and easy to be coated. Corrosion prevention plating allows zinc to be used widely in the area of steel parts protection, especially in preventing oxide etch and is a common surface treatment for conveyor rollers.

1.Trivalent chromium blue white zinc plated, conforms to green environmental standards.

2.The acceptable thickness of the zinc layer for rollers is 8-12 μm.

3.Special sealing ensures our zinc plating is much more rust resistant than commonly available tube which has been proven in the salt spray tests (As pictured).

4.Zinc plating does not have strong resistance to abrasion. It will wear gradually during operation. If required, you can choose hard chrome plating or other surface treatments.

5.When rollers are shipped by sea, special packing for shipment is still needed.

6.Food is not permitted to come in direct contact with zinc plated surfaces.

Hard Chrome Plating

Thick chrome plating (above 20 μm) is formed on the surface of the component to improve the performance of the component with regards to hardness, abrasion resistance, temperature resistance and corrosion resistance.

1.Excellent abrasion resistance.

2.The coefficient of sliding friction is only 50% compared to steel and iron.

3.Slight oxidation of the chrome layer leads to surface passivation, a thin and transparent film. After long periods of exposure at room temperature the passivation film causes discolouration and forms a protective layer for the chrome finish.

4.The chrome layer is brittle and is not suitable for bearing any large distortion which may cause breakage or spalling of the chrome layer.



Rubber Lagging/Polyurethane

For effectively improving conveying efficiency, eliminating slip such as specified area acceleration, small inclines, etc., we need to add friction between the contact surfaces. Rubber lagging is the most commonly used method. It may also provide protection to the conveyed surface of the product and reduce the conveying noise.

Natural Rubber:

1.High elasticity under room temperature.

2.Good mechanical hardness, small loss on lag.

3.Good electrical insulation properties.

4.Alkali resistant. No resistance to strong acids.

5.Low resistance to oil and solvent.

Nitrile Butadiene Rubber (NBR):

1.Excellent resistance to oil.

2.Low elasticity.

3.Poor cold and ozone resistance.

4.Low electrical insulation properties.

Polyurethane(PU):

1.High abrasive resistance

2.High level of oil and water resistance.

3.Biological aging resistance.

4.High mechanical strength.

PVC /PU Sleeve

As an alternative to traditional rubber lagging, you can select PVC/PU sleeving which combine most of the properties of rubber lagging. The PVC sleeve has similar properties to rubber lagging in the areas of increased friction, bottom surface protection and reduced noise. It has a short lead time and is cost effective.

Material	Soft PVC	Soft PVC(enhanced)	PU sleeve
Application	For straight conveyor line (carton boxes)	Used for working conditions such as lateral force and sharp objects on the conveyed product	Used in working conditions that require higher friction and anti-splitting
Colour	Grey, RAL7042	Grey, RAL7045	Black, RAL7021
Tube diameter	Φ50/60mm	Φ50mm	
Hardness	Shore(A) 63±5	Shore(A) 80±5	Shore(A) 85±3
Resistance	No resistance to oil and gasoline		Resistance to oil, acid and alkali
Thickness	2mm		2mm/3mm
Electrical insulation	Non-conducting		
Suitable temperature	-25℃~+50℃		-30℃~+40℃
Other	Not food grade material		Food grade (FDA compliant)

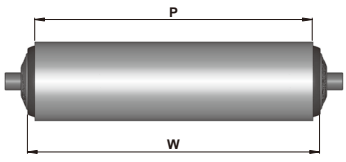

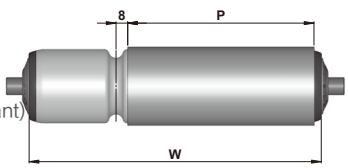

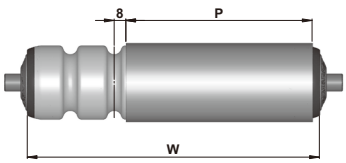

⚠ 1. Hardness measurement environment temperature：23±2℃.

2.Typically the sleeve covers the roller’s outside surface (As pictured).

3.If you only require a portion of roller to be covered, please confirm the length of PVC sleeve and the position.

4.We recommend that the side of the roller with a groove should not be covered with a sleeve (As pictured).

Shaft

The total load on the roller is borne by the shaft which must sustain the entire weight. Damon has chosen to adopt high quality carbon structural steel as the shaft material which has a increased hardness and conforms to GB/T 905 requirements.

Shaft Size

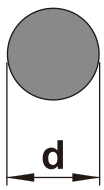

Round shaft(mm):

d: Φ6, Φ8, Φ10, Φ12, Φ15, Φ17, Φ20, Φ25

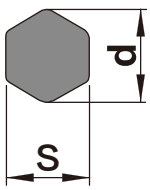

Hexagonal shaft(mm):

S: 11hex
d: Φ12



Polymer noiseless sleeve for shaft（mm):

S: 12hex
s：(10.5)hex

⚠ Applicable mounting hole range: 11.2–11.7mm (edge to edge)

Surface Treatment

The standard shaft surface treatment is antirust oil. Zinc plated shafts are only used in stainless steel or PVC rollers.

Installation Method

1.The roller installation method determines the complexity of roller assembly. Different installation methods also influence the load capacity of the roller.

2.Following are examples of common installation methods and their features. Installation method can be custom-ized.

Spring loaded:

1.This is the most popular installation method for gravity rollers. Assembly and disassembly is simple and quick.

2.Installation clearance is required between the inner width of the frame and the roller. Different clearances are required for different roller diameters, shaft diameters and height of roller. Typically allow 0.5 ~ 1mm gap each side.

3.Cross braces are required between the frames to stabilize and reinforce the conveyor.

4.The spring loaded installation method is not recommended for sprocket rollers.

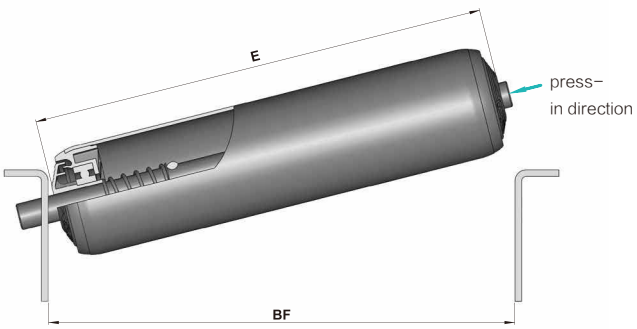

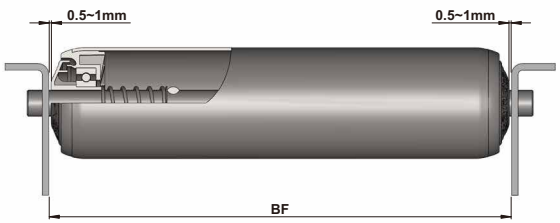

⚠ The elastic press-in type needs to be installed diagonally, and it is recommended that the roller surface is not lower than the frame surface after installation



Internal thread:

1.This is the typical installation method for sprocket rollers. The roller is fastened to the frame with a bolt on each end.

2.Assembly and disassembly is more time consuming.

3.Bolt hole clearance in the frame should not be too large. Typically the clearance should be 0.5mm. For example, for an M8 bolt the recommended mounting hole is Φ8.5mm.

4.When using an aluminium frame, the shaft should be of a large diameter with a small diameter fixing bolt to reduce the risk of the shaft breaking through the aluminium frame.

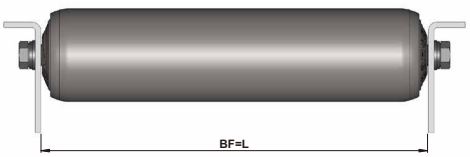

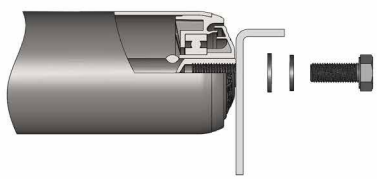

External thread:



⚠ Nuts are required on the inside and outside of the frame to ensure the roller runs smoothly.
The external threaded shaft needs to be equipped with nuts by the customer

Flat milling:

1.The round end of the roller shaft is machined flat to fit into a slot in the frame. Assembly and disassembly is very easy.

2.Flat milling shaft type rollers are not suitable for sprocket rollers, poly-vee rollers or other driven roller applications.



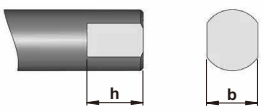

Pressed semicircle (D shape):

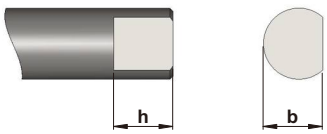

Pin hole:

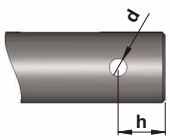

Bearing

The bearings are the most important component of the roller. The correct choice of bearing directly determines the reliability and lifespan of the roller.

Common Types

Depending on the roller application, the roller will utilize different types of bearings with the appropriate tolerance, lubrication and seal.



Unit: mm

Bearing type	Outer ring diameter	Inner ring diameter	width
6001	28	12	8
6002	32	15	9
6202	35	15	11
6003	35	17	10
6004	42	20	12
6204	47	20	14
6205	52	25	15

Lubrication:

1.Good adhesion, difficult to run off and leak.

2.Long lubricating life, no need to replenish or change the grease.

Clearance:

The clearence of the bearing ensures the bearing runs freely, smoothly and without resistance. To ensure the bearing runs reliability and the axis remains centred, the number of balls to bear the load is maximised.

The clearence of the bearing suitable for the roller is C3. This has a large influence on the bearing’ s dynamic performance including noise, vibration, friction, running accuracy and lifespan.

Seal:

The purpose of the bearing seal is to prevent inner grease from leaking and outside contaminants such as dust, water and other such contaminants from entering into the inside of the bearing. The seal ensures the bearing runs safely and with the utmost sustainably under all conditions.

We recommend using the RZ sealing method which combines the advantages of both the RS and ZZ. It has the same low friction as the ZZ and also has similar seal and dustproof performance to the RS.



Roller Part Number

E.G.: 2.321 . SHC . ACC - 800 - 863
①　②　③　④　⑤

⚠ If there is no standard code, please refer to the drawing confirmation.

① Series feature

The specifications and details including conveying method, structural features, driving mode. The first character refers to the roller's conveying method.

1 —— gravity conveyor roller series

2 —— driven conveyor roller series

3 —— accumulating conveyor roller series

② Tube features

The specifications and details of roller tube material, diameter and surface treatment.

③ Shaft features

The specifications and details of shaft material, diameter, surface treatment and installation method.

④ Roller width

Roller's theoretical working surface. This may vary between different types of rollers. Use W to indicate width. Units are in mm.

⑤ Length of shaft

Roller's shaft length. Use L to indicate length. Units are in mm. In some installation methods such as internal thread, L=BF.

⚠ Frame inner width

1.Distance between two frames. Use BF to indicate.
2.Generally this is the key factor in determining the roller length.
3.Please use "BF" as the basis of calculating the length when selecting rollers.

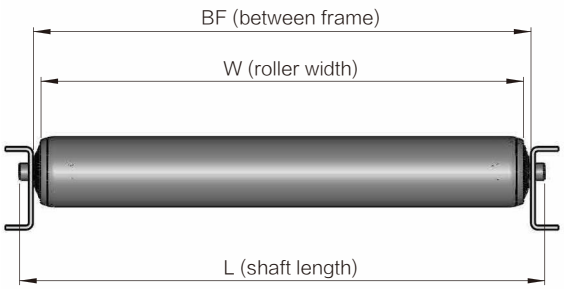

Dimensional Drawing Download

Damon Industry developed the first web based roller drawing download system which allows the customer to obtain the required information quickly, save costs of design drawings and communication and share the latest releases of Damon Industry products.

Login to Damon Industry official website to try “Drawing Download System”

http://en.damonroller.com/Home/CadDownload?roleId=201709075daba11e

Web login

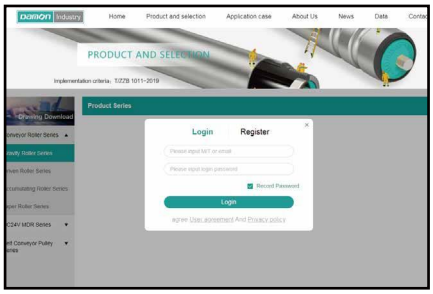

Account login

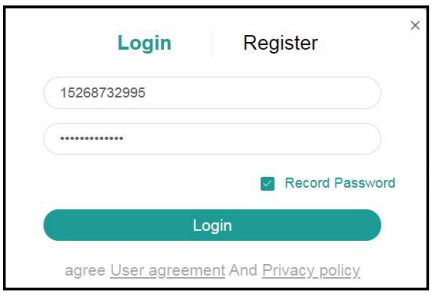

Choose parameters

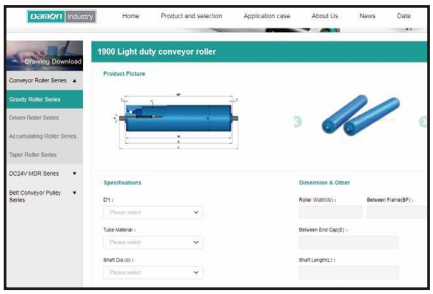

Check email

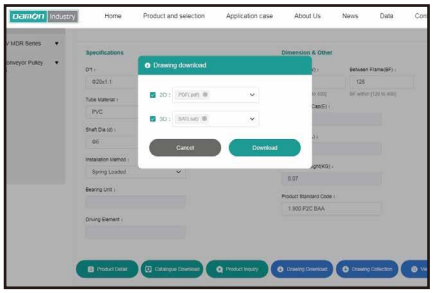

Drawing download



Additional Design Information

1.The longer and wider the goods, the more reliably the goods will convey in a straight line. If the goods are very short and small, installing auxiliary devices should be considered to ensure the goods convey straight.

2.The taller the goods, the higher the risk of them failing over during conveying. Please consider the following solutions:

◇ Reduce the roller pitch to allow more rollers to support the goods.

◇ Avoid sudden acceleration or braking.

◇ When conveying on an incline or decline, check the centre of gravity of the goods to determine the risk of the goods falling off the conveyor.

3.Our anti-static design inside the roller will transmit the electric charge to the shaft of the roller and then discharge it through the earth connection to the conveyor frame. (only effective when rolling)Please note, do not allow the frame surface treatment to inhibit the earth connection.

4.The conveyors mentioned are for non-impact loading. Where impact loading occurs, you need to not only reinforce the conveyor frame and support legs but also the roller:

◇ Reduce the roller pitch accordingly.

◇ Increase the roller diameter or tube thickness.

5.Our standard products will satisfy your requirements of operation under normal environmental conditions and humidity. If the rollers are subject to long term exposure in a humid environment, please consider stainless steel or other water-proof and anti-corrosion materials.





GRAVITY CONVEYING

Gravity conveyors are the most popular and simple method of conveying goods. Rollers are non-powered. Goods are moved and conveyed by gravity or human force. It is usually arranged horizontally or declined.

Horizontal Arrangement:

The goods are moved by human force. Suitable for the conveying of light weight products, short distances and infrequent work.

Declined Arrangement:

The goods are conveyed in the decline direction by gravity force. Increasing the weight of the goods and the angle of the decline increases the speed of the goods.

Rollers are listed according to their series and available features.

Products features	Series	Diameter	End components	Page
PVC tube, polymer bearing housing, light and smooth running, light duty conveyors.	***1900***	Φ20/25/30/38/50		**16-17**
Semi precision bearing, I the ability to withstand impact loads is better than other series.	***1100***	Φ18/25/38/50		**18-21**
Polymer bearing housing, most popular in carton conveyors, attractive and low noise.	***1200***	Φ38/48/50/60/76/80		**22-26**
Steel bearing housing, strong and durable, available in many diameters, high load capacity.	***1800***	Φ38/50/60/76/80/89		**27-33**

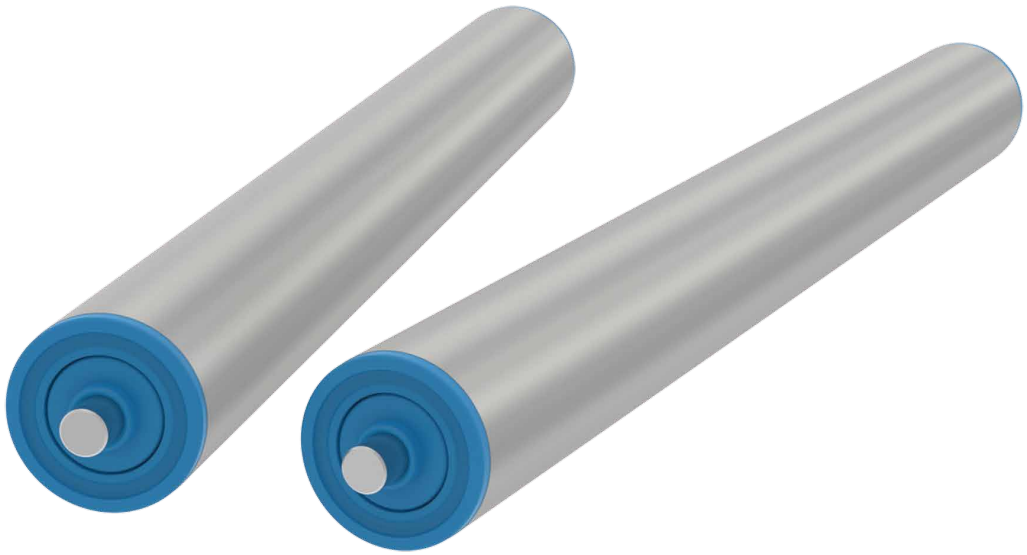

1900 Series

Light Duty Conveyor Roller

Product Features

- Very light, smooth running. Suitable for light duty conveying.
- Utilizes polymer ball bearings. The inner/outer flange of the bearing is made of POM. The ball is made of stainless steel.
- PVC tube with good chemical stability.
- Higher noise levels compared with other series rollers.
- Temperature range: −5℃ ~ +40℃.
- Humidity range: 30%~ 90% RH (non−condensation).
  Please contact us if humidity out of this scope.

Specifications

Bearing Unit	
Bearing housing	POM
Ball	Stainless steel

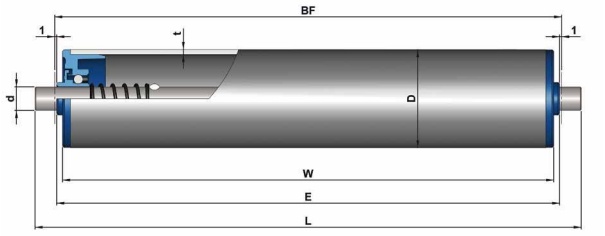

1900 Series Spring Loaded

Tube Dia.(D)	Shaft Dia.(d)			
Φ20	Φ6	BF=W+8	E=W+6	L=W+28
Φ25	Φ8	BF=W+8	E=W+6	L=W+28
Φ30	Φ8	BF=W+10	E=W+8	L=W+30
Φ38	Φ8	BF=W+10	E=W+8	L=W+30
Φ50	Φ8/10/12	BF=W+8	E=W+6	L=W+28

Tube	D*T	Shaft Dia.(d)			
		Φ6	Φ8	Φ10	Φ12
PVC	Φ20x1.1	1.900.P2C.BAA			
	Φ25x1.8		1.900.P9C.BBA		
	Φ30x1.8		1.900.PCC.BBA		
	Φ38x2.0		1.900.P5C.BBA		
	Φ50x2.5		1.900.P8C.BBA	1.900.P8C.BMA	1.900.P8C.BCA

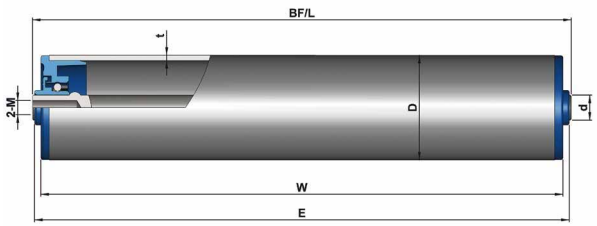

1900 Series Internal Thread

Tube Dia.(D)	Shaft Dia.(d)			
Φ50	Φ12	BF=W+8	E=W+6	L=W+8

Tube	D*T	Shaft Dia.(d)
		Φ12 (M8x15)
PVC	Φ50x2.5	1.900.P8C.BCC



1100 Series

Light, Medium Duty Conveyor Roller

Product Features

- Fitted with specially designed semi-precision bearings.
- The ball bearing tolerance is greater than a precision ball bearing. These rollers have the ability to withstand higher impact loads than other series rollers.
- The environmental working conditions are broad. They can be used in both high and low temperature applications.
- Anti-static design.
- Slightly higher noise levels compared with precision ball bearings.
- Not suitable for carring roller & tensioning position of belt conveyor.
- Temperature range: − 20℃ ~ + 80℃.

Specifications

Bearing Unit	
Semi-precision bearing	Steel, zinc plated



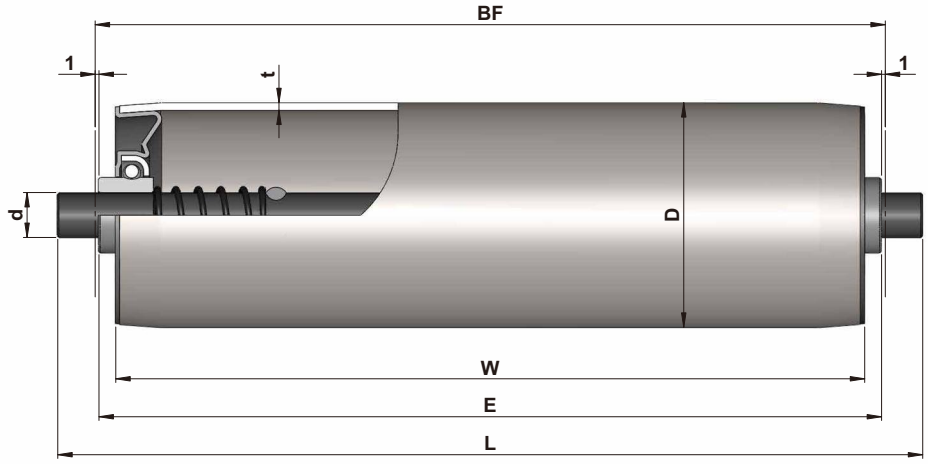

1100 Series Spring Loaded

Tube Dia.(D)	Shaft Dia.(d)			
Φ18	Φ6	BF=W+6	E=W+4	L=W+26
Φ25	Φ6/8	BF=W+12	E=W+10	L=W+32
Φ50	Φ8	BF=W+11	E=W+9	L=W+31

Tube	D*T	Shaft Dia.(d)	
		Φ6	Φ8
Steel, Zinc-plated	Φ18x1.0	1.100.S1C.AAA	
	Φ25.6x1.0	1.100.SBC.AAA	1.100.SBC.ABA
	Φ50x1.5		1.100.SHC.ABA
Stainless steel (304)	Φ25x0.7	1.100.N3C.BAA	1.100.N3C.BBA
	Φ50x1.5		1.100.NHC.BBA
Aluminium	Φ25.6x1.0	1.100.ABC.AAA	1.100.ABC.ABA
	Φ50x1.5		1.100.AHC.ABA

Φ50 rollers can be fitted with PVC sleeve (2mm)/PU sleeve (2mm/3mm),PVC/PU sleeve is not anti-static.

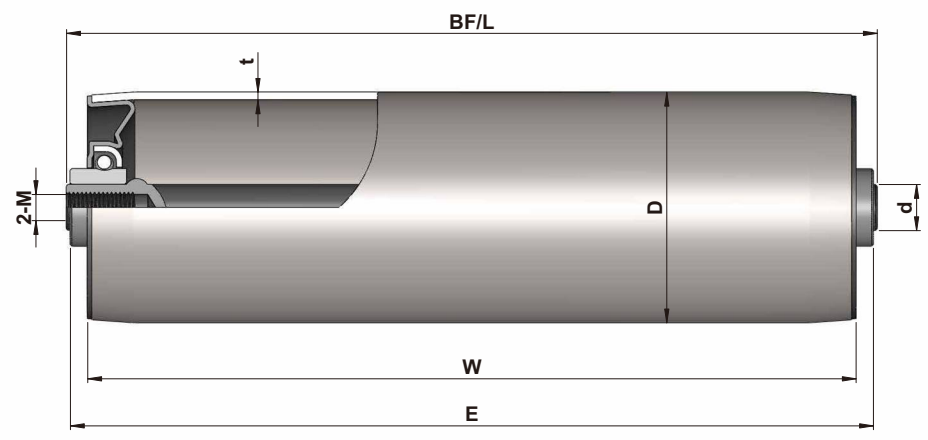

1100 Series Internal Thread

Tube Dia.(D)	Shaft Dia.(d)			
Φ25	Φ8	BF=W+12	E=W+10	L=W+12

Tube	D*T	Shaft Dia.(d)
		Φ8 (M5x10)
Steel, zinc plated	Φ25.6x1.0	1.100.SBC.ABC
Stainless steel (304)	Φ25x0.7	1.100.N3C.BBC
Aluminium	Φ25.6x1.0	1.100.ABC.ABC



1100 Series Load Capacity

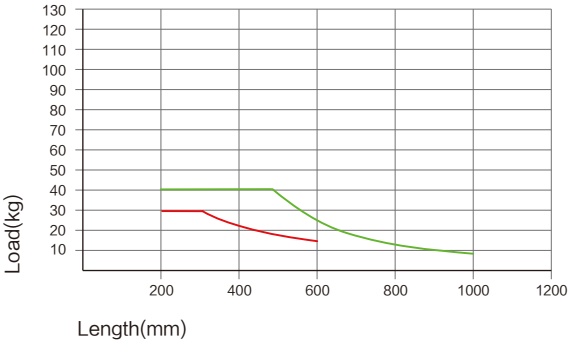

- Steel tube Φ25.6x1.0，shaft Φ8，spring loaded
- Steel tube Φ25.6x1.0，shaft Φ6，spring loaded

⚠ Above data shows the static load capacity of the roller for a uniformly distributed load.



1200 Series
Universal Conveyor Roller

Product Features

- It is widely used and the most popular product in the gravity roller series. It is commonly used in carton conveying applications.
- The bearing end cap consists of a precision ball bearing, a polymer housing and end cap seal. Combined they provide an attractive, smooth and quite running roller.
- The design of the end cap protects the bearings by providing excellent resistance to dust and splashed water.
- Can be configured with different bearings according to the application. Meets the requirements for light gravity chutes.
- Suitable for the high speed applications. Maximum speed varies with roller length and diameter. Maximum speed up to 2~3m/s.
- Standard configuration with anti-static design surface impedance $\leqslant 10^{6}\ \Omega$。
- Temperature range: − 5℃ ~ + 40℃.
- Humidity range: 30%~ 90% RH (non-condensation).
  Please contact us if humidity out of this scope.

Specifications

Bearing unit	
Bearing housing	Polyamide, black
End cap	Polypropylene, Damon Green
Precision ball bearing	6002/6003/6205



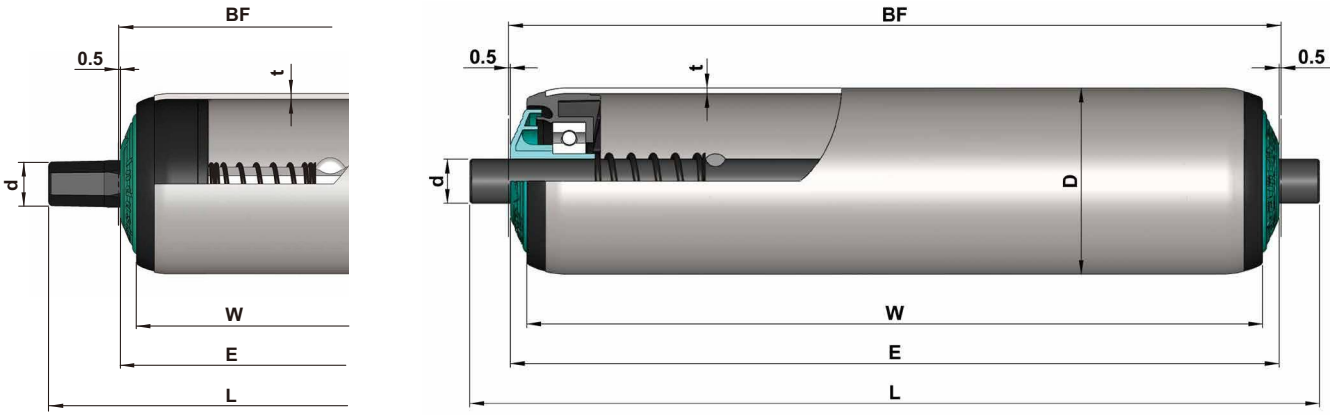

Polymer noiseless sleeve for shaft

1200 Series Spring Loaded

Tube Dia.(D)	Shaft Dia.(d)			
Φ38	Φ8/10/12/11hex	BF=W+10	E=W+9	L=W+31
Φ48	Φ10/12/11hex	BF=W+10	E=W+9	L=W+31
	11hex Polymer noiseless sleeve for shaft	BF=W+10	E=W+9	L=W+49
Φ50	Φ8/10/12/11hex	BF=W+10	E=W+9	L=W+31
	11hex Polymer noiseless sleeve for shaft	BF=W+10	E=W+9	L=W+49
Φ60	Φ10/12/11hex	BF=W+10	E=W+9	L=W+31

Tube	D*T	Shaft Dia.(d)				
		Φ8	Φ10	11hex	11hex Polymer noiseless sleeve for shaft	Φ12
Steel, zinc plated	Φ38x1.2	1.200.SDC.ABA	1.200.SDC.AMA	1.200.SDC.AFA	1.200.SDC.AHA	1.200.SDC.ACA
	Φ48.6x1.5		1.200.JGA.AMA	1.200.JGA.AFA	1.200.JGA.AHA	1.200.JGA.ACA
	Φ50x1.5	1.200.SHC.ABA	1.200.SHC.AMA	1.200.SHC.AFA	1.200.SHC.AHA	1.200.SHC.ACA
	Φ50x2.0		1.200.SWC.AMA	1.200.SWC.AFA	1.200.SWC.AHA	1.200.SWC.ACA
	Φ60x2.0		1.200.SOC.AMA	1.200.SOC.AFA	1.200.SOC.AHA	1.200.SOC.ACA
Steel, zinc plated, with PVC sleeve (2mm)	Φ50x1.5	1.200.SHD.ABA	1.200.SHD.AMA	1.200.SHD.AFA	1.200.SHD.AHA	1.200.SHD.ACA
	Φ50x2.0		1.200.SWD.AMA	1.200.SWD.AFA	1.200.SWD.AHA	1.200.SWD.ACA
	Φ60x2.0			1.200.SOD.AFA	1.200.SOD.AHA	1.200.SOD.ACA
Stainless steel (304)	Φ38x1.2	1.200.NDC.BBA	1.200.NDC.BMA	1.200.NDC.BFA	1.200.NDC.AHA	1.200.NDC.BCA
	Φ48.6x1.5		1.200.NGC.BMA	1.200.NGC.BFA	1.200.NGC.AHA	1.200.NGC.BCA
	Φ50x1.5	1.200.NHC.BBA	1.200.NHC.BMA	1.200.NHC.BFA	1.200.NHC.AHA	1.200.NHC.BCA
	Φ60x2.0		1.200.NOC.BMA	1.200.NOC.BFA	1.200.NOC.AHA	1.200.NOC.BCA
Aluminium	Φ50x1.5	1.200.AHC.ABA	1.200.AHC.AMA	1.200.AHC.AFA	1.200.AHC.AHA	1.200.AHC.ACA
	Φ60x2.0		1.200.AOC.AMA	1.200.AOC.AFA	1.200.AOC.AHA	1.200.AOC.ACA
PVC	Φ50x2.5	1.200.P8C.BBA	1.200.P8C.BMA	1.200.P8C.BFA	1.200.P8C.AHA	1.200.P8C.BCA

Φ50 rollers can be fitted with PU sleeve (2mm/3mm),PVC/PU sleeve is not anti-static.

⚠ Polymer noiseless sleeve for shaft roller：

① Actual frame width= E+（1~3）mm，Excessive width inside the frame will damage the shaft core and roller

② Applicable mounting hole range：11.2~11.7mm（edge to edge）

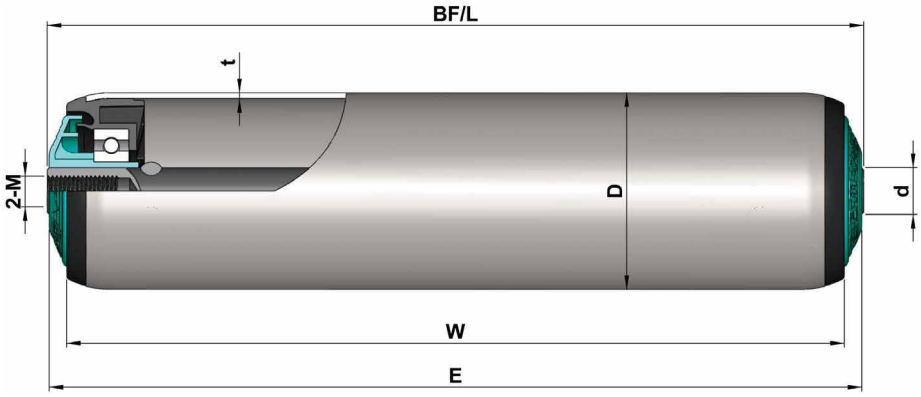

1200 Series Internal Thread

Tube Dia.(D)	Shaft Dia.(d)			
Φ38	Φ14	BF=W+10	E=W+9	L=W+10
Φ48	Φ14/15	BF=W+10	E=W+9	L=W+10
Φ50	Φ14/15/17	BF=W+10	E=W+9	L=W+10
Φ60	Φ14/15/17	BF=W+10	E=W+9	L=W+10
Φ76	Φ20	BF=W+12	E=W+11	L=W+12
Φ80	Φ20	BF=W+12	E=W+11	L=W+12

Tube	D*T	Shaft Dia.(d)			
		Φ14 (M8)	Φ15 (M10x20)	Φ17 (M12x25)	Φ20 (M12x25)
Steel, zinc plated	Φ38x1.2	1.200.SDC.BLC			
	Φ48.6x1.5	1.200.JGA.BLC	1.200.JGA.ADC		
	Φ50x1.5	1.200.SHC.BLC	1.200.SHC.ADC	1.200.SHC.AGC	
	Φ50x2.0	1.200.SWC.BLC	1.200.SWC.ADC		
	Φ60x2.0	1.200.SOC.BLC	1.200.SOC.ADC		
	Φ60x3.0			1.200.JLA.AGC	
	Φ76x3.0				1.200.JSA.AEC
	Φ80x3.0				1.200.J6A.AEC
Steel, zinc plated, with PVC sleeve (2mm)	Φ50x1.5	1.200.SHD.BLC	1.200.SHD.ADC		
	Φ50x2.0	1.200.SWD.BLC	1.200.SWD.ADC		
	Φ60x2.0	1.200.SOD.BLC	1.200.SOD.ADC		
Stainless steel (304)	Φ38x1.2	1.200.NDC.BLC			
	Φ48.6x1.5	1.200.NGC.BLC	1.200.NGC.BDC		
	Φ50x1.5	1.200.NHC.BLC	1.200.NHC.BDC	1.200.NHC.BGC	
	Φ60x2.0	1.200.NOC.BLC	1.200.NOC.BDC		
	Φ76x3.0				1.200.NSC.BEC
Aluminium	Φ50x1.5	1.200.AHC.BLC	1.200.AHC.ADC		
	Φ60x2.0	1.200.AOC.BLC	1.200.AOC.ADC		
PVC	Φ50x2.5	1.200.P8C.BLC	1.200.P8C.BDC		

Φ50 rollers can be fitted with PU sleeve (2mm/3mm),PVC/PU sleeve is not anti-static.



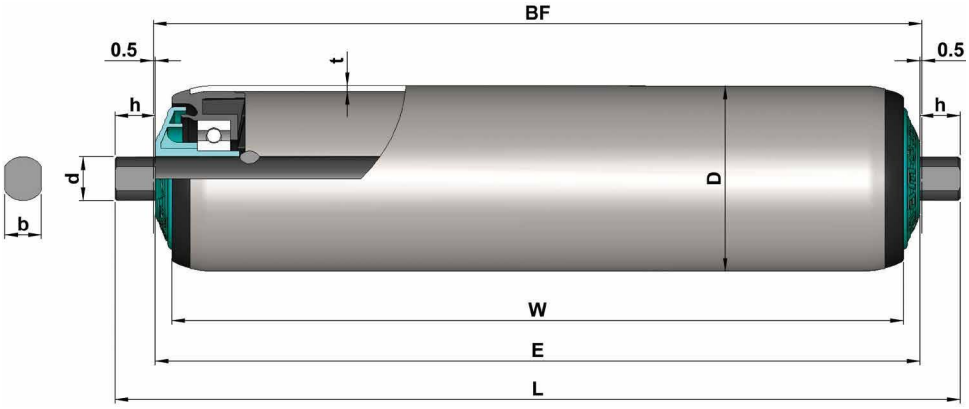

1200 Series Milled Flats

Tube Dia.(D)	Shaft Dia.(d)			
Φ38	Φ12	BF=W+10	E=W+9	L=W+31
Φ48	Φ12/15	BF=W+10	E=W+9	L=W+31
Φ50	Φ12/15/17	BF=W+10	E=W+9	L=W+31
Φ60	Φ12/15/17	BF=W+10	E=W+9	L=W+31
Φ76	Φ20	BF=W+12	E=W+11	L=W+41
Φ80	Φ20	BF=W+12	E=W+11	L=W+41

Tube	D*T	Shaft Dia.(d)			
		Φ12 (b/h=10/11)	Φ15 (b/h=12/11)	Φ17(b/h=15/11)	Φ20 (b/h=16/15)
Steel, zinc plated	Φ38x1.2	1.200.SDC.ACB			
	Φ48.6x1.5	1.200.JGA.ACB	1.200.JGA.ADB		
	Φ50x1.5	1.200.SHC.ACB	1.200.SHC.ADB	1.200.SHC.AGB	
	Φ50x2.0	1.200.SWC.ACB	1.200.SWC.ADB		
	Φ60x2.0	1.200.SOC.ACB	1.200.SOC.ADB		
	Φ60x3.0			1.200.JLA.AGB	
	Φ76x3.0				1.200.JSA.AEB
	Φ80x3.0				1.200.J6A.AEB
Steel, zinc plated, with PVC sleeve (2mm)	Φ50x1.5	1.200.SHD.ACB	1.200.SHD.ADB		
	Φ50x2.0	1.200.SWD.ACB	1.200.SWD.ADB		
	Φ60x2.0	1.200.SOD.ACB	1.200.SOD.ADB		
Stainless steel (304)	Φ38x1.2	1.200.NDC.BCB			
	Φ50x1.5	1.200.NHC.BCB	1.200.NHC.BDB	1.200.NHC.BGB	
	Φ60x2.0	1.200.NOC.BCB	1.200.NOC.BDB		
	Φ76x3.0				1.200.NSC.BEB
Aluminium	Φ50x1.5	1.200.AHC.ACB	1.200.AHC.ADB		
	Φ60x2.0	1.200.AOC.ACB	1.200.AOC.ADB		
PVC	Φ50x2.5	1.200.P8C.BCB	1.200.P8C.BDB		

Φ50 rollers can be fitted with PU sleeve (2mm/3mm),PVC/PU sleeve is not anti-static.

1200 Series Load Capacity

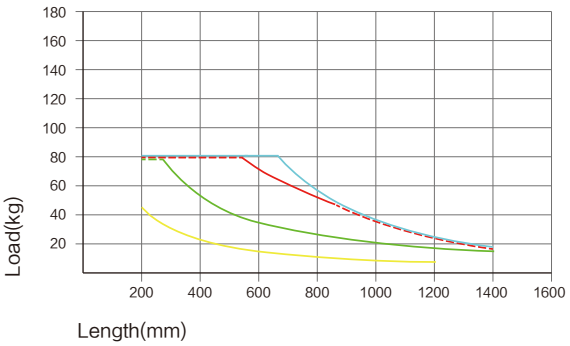

- Steel tube Φ38x1.2, shaft Φ14, internal thread
- Steel tube Φ38x1.2, shaft Φ12, spring loaded
- Steel tube Φ38x1.2, shaft Φ10, spring loaded
- Steel tube Φ38x1.2, shaft Φ8, spring loaded

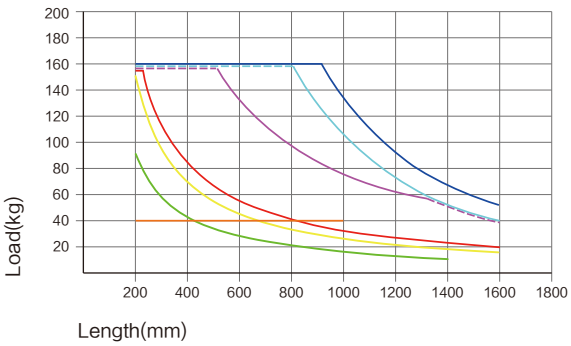

- Steel tube Φ50x2.0, shaft Φ14/15, internal thread
- Steel tube Φ50x1.5, shaft Φ14/15, internal thread
- Steel tube Φ50x1.5, shaft Φ15, milled flats
- Steel tube Φ50x1.5, shaft Φ12, spring loaded
- Steel tube Φ50x1.5, shaft11hex, spring loaded
- Steel tube Φ50x1.5, shaft Φ10, spring loaded
- Steel tube Φ50x1.5, shaft11hex, Polymer noiseless sleeve for shaft

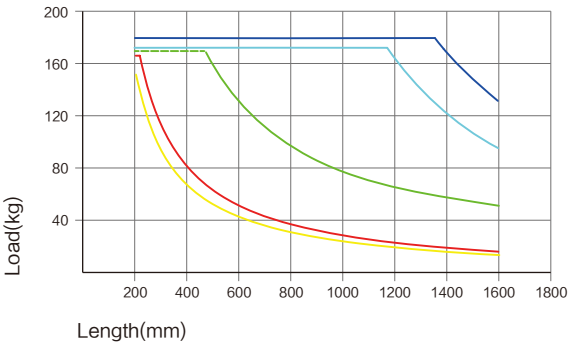

- Steel tube Φ60x3.0, shaft Φ17, internal thread
- Steel tube Φ60x2.0, shaft Φ14/15, internal thread
- Steel tube Φ60x2.0, shaft Φ15, milled flats
- Steel tube Φ60x2.0, shaft Φ12, spring loaded
- Steel tube Φ60x2.0, shaft 11hex, spring loaded

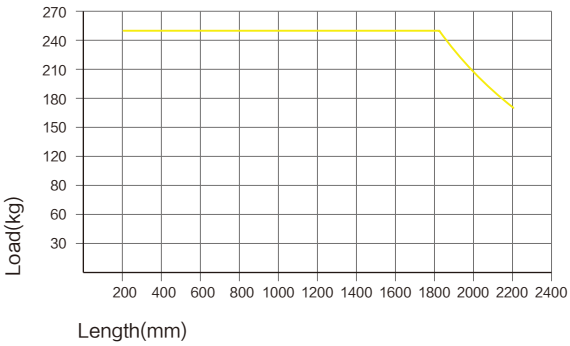

- Steel tube Φ80x3.0, shaft Φ20, internal thread
- Steel tube Φ76x3.0, shaft Φ20, internal thread

⚠ Above data shows the static load capacity of the roller for a uniformly distributed load.





1800 Series

Gravity Conveyor Roller

Product Features

- The precision ball bearing is secured in the steel stamped bearing housing. The bearing is tight and durable. Able to withstand greater axial forces than a plastic bearing unit.
- The environmental working conditions are broad. They can be used in both high and low temperature applications.
- Complete range of tube diameters available. High load capacity.
- Anti-static design.
- Not suitable for carring roller & tensioning position of belt conveyor.
- Temperature range: -5℃ ~ +40℃,Remove the retaining ring on both sides (black), the temperature can reach -30 ℃~+80 ℃.

Specifications

Bearing unit	
Bearing housing	Steel, zinc plated
Precision ball bearing	6001/6202/6004/6204
Ground sleeve	Polyamide, black

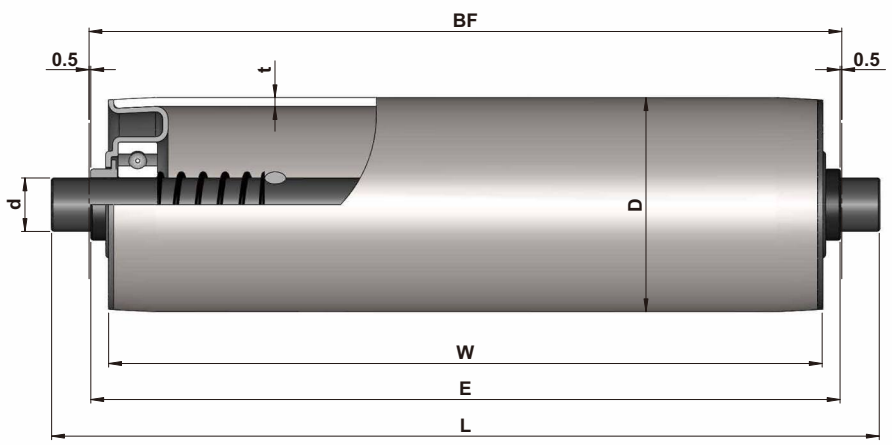

1800 Series Spring Loaded

Tube Dia.(D)	Shaft Dia.(d)			
Φ38	Φ12	BF=W+10	E=W+9	L=W+31
Φ50	Φ12	BF=W+9	E=W+8	L=W+30
Φ50	Φ15	BF=W+11	E=W+10	L=W+32
Φ60	Φ12/15	BF=W+11	E=W+10	L=W+32
Φ76	Φ15	BF=W+10	E=W+9	L=W+31
Φ76	Φ20	BF=W+11	E=W+10	L=W+40
Φ80	Φ20	BF=W+11	E=W+10	L=W+40
Φ89	Φ20	BF=W+11	E=W+10	L=W+40

Tube	D*T	Shaft Dia.(d)		
		Φ12	Φ15	Φ20
Steel, zinc plated	Φ38x1.2	1.800.SDC.ACA		
	Φ50x1.5	1.800.SHC.ACA	1.800.SHC.ADA	
	Φ50x2.0	1.800.SWC.ACA	1.800.SWC.ADA	
	Φ60x2.0	1.800.SOC.ACA	1.800.SOC.ADA	1.800.SOC.AEA
	Φ60x3.0		1.800.JLA.ADA	
	Φ76x3.0		1.800.JSA.ADA	1.800.JSA.AEA
	Φ76x4.0			1.800.JRB.AEA
	Φ80x3.0			1.800.J6A.AEA
	Φ89x3.0			1.800.JYA.AEA
	Φ89x4.0			1.800.JUB.AEA
High-strength steel，Zinc-plated	Φ76x2.0			1.800.GXA.AEA
	Φ80x2.0			○
Stainless steel (304)	Φ38x1.2	1.800.NDC.BCA		
	Φ50x1.5	1.800.NHC.BCA	1.800.NHC.BDA	
	Φ60x2.0	1.800.NOC.BCA	1.800.NOC.BDA	
	Φ76x3.0		1.800.NSC.BDA	1.800.NSC.BEA
Aluminium	Φ38.2x1.5	1.800.AFC.ACA		
	Φ50x1.5	1.800.AHC.ACA	1.800.AHC.ADA	
	Φ60x2.0	1.800.AOC.ACA	1.800.AOC.ADA	
	Φ76x3.0		1.800.ASC.ADA	1.800.ASC.AEA
	Φ80x4.0			1.800.ATC.AEA

Φ50、60mm rollers can be fitted with PVC sleeve (2mm).
Φ50 rollers can be fitted with PU sleeve ((2mm/3mm).
PVC/PU sleeve is not anti-static.

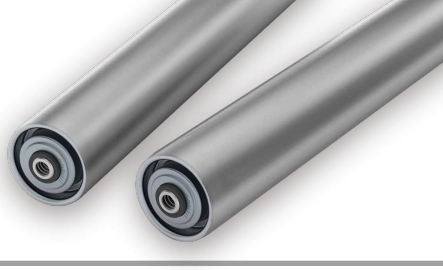

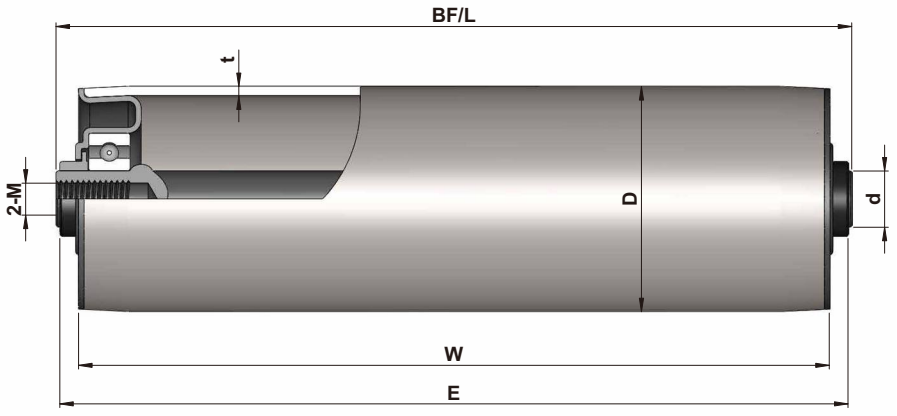

1800 Series Internal Thread

Tube Dia.(D)	Shaft Dia.(d)			
Φ38	Φ12	BF=W+10	E=W+9	L=W+10
Φ50	Φ12	BF=W+9	E=W+8	L=W+9
Φ50	Φ15	BF=W+11	E=W+10	L=W+11
Φ60	Φ12/15	BF=W+11	E=W+10	L=W+11
Φ76	Φ15	BF=W+10	E=W+9	L=W+10
Φ76	Φ20	BF=W+11	E=W+10	L=W+11
Φ80	Φ20	BF=W+11	E=W+10	L=W+11
Φ89	Φ20/25	BF=W+11	E=W+10	L=W+11

Tube	D*T	Shaft Dia.(d)			
		Φ12 (M8x15)	Φ15 (M10x20)	Φ20 (M12x25)	Φ25 (M12x25)
Steel, zinc plated	Φ38x1.2	1.800.SDC.ACC			
	Φ50x1.5	1.800.SHC.ACC	1.800.SHC.ADC		
	Φ50x2.0	1.800.SWC.ACC	1.800.SWC.ADC		
	Φ60x2.0	1.800.SOC.ACC	1.800.SOC.ADC	1.800.SOC.AEC	
	Φ60x3.0		1.800.JLA.ADC		
	Φ76x3.0		1.800.JSA.ADC	1.800.JSA.AEC	
	Φ76x4.0			1.800.JRB.AEC	
	Φ80x3.0			1.800.J6A.AEC	
	Φ89x3.0			1.800.JYA.AEC	1.800.JYA.AKC
	Φ89x4.0			1.800.JUB.AEC	
High-strength steel, Zinc-plated	Φ76x2.0			1.800.GXA.AEC	
	Φ80x2.0			○	
Stainless steel (304)	Φ38x1.2	1.800.NDC.BCC			
	Φ50x1.5	1.800.NHC.BCC	1.800.NHC.BDC		
	Φ60x2.0	1.800.NOC.BCC	1.800.NOC.BDC	1.800.NOC.BEC	
	Φ76x3.0		1.800.NSC.BDC	1.800.NSC.BEC	
Aluminium	Φ38.2x1.5	1.800.AFC.ACC			
	Φ50x1.5	1.800.AHC.ACC	1.800.AHC.ADC		
	Φ60x2.0	1.800.AOC.ACC	1.800.AOC.ADC	1.800.AOC.AEC	
	Φ76x3.0		1.800.ASC.ADC	1.800.ASC.AEC	
	Φ80x4.0			1.800.ATC.AEC	

Φ50、60mm rollers can be fitted with PVC sleeve (2mm).
Φ50 rollers can be fitted with PU sleeve ((2mm/3mm).
PVC/PU sleeve is not anti-static.

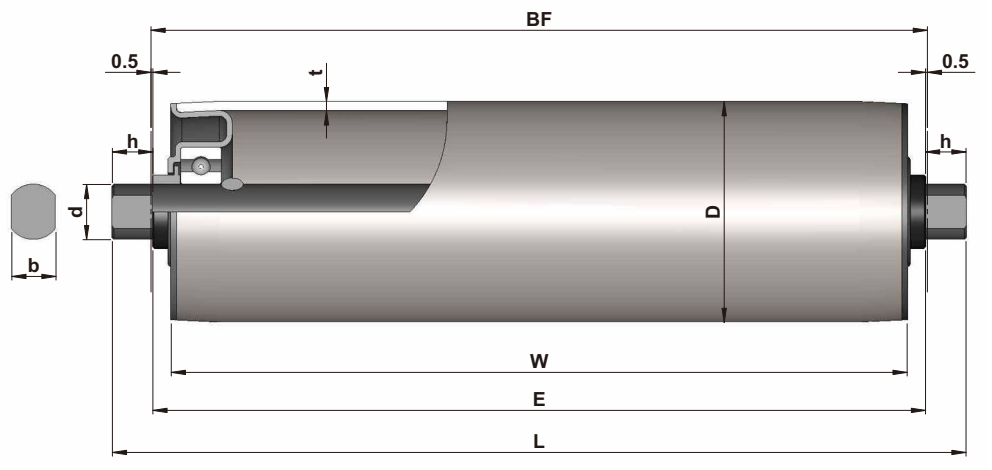

1800 Series Milled Flats

Tube Dia.(D)	Shaft Dia.(d)			
Φ38	Φ12	BF=W+10	E=W+9	L=W+31
Φ50	Φ12	BF=W+9	E=W+8	L=W+30
Φ50	Φ15	BF=W+11	E=W+10	L=W+32
Φ60	Φ12/15	BF=W+11	E=W+10	L=W+32
Φ76	Φ15	BF=W+10	E=W+9	L=W+31
Φ76	Φ20	BF=W+11	E=W+10	L=W+40
Φ80	Φ20	BF=W+11	E=W+10	L=W+40
Φ89	Φ20/25	BF=W+11	E=W+10	L=W+40

Tube	D*T	Shaft Dia.(d)			
		Φ12 (b/h=10/11)	Φ15 (b/h=12/11)	Φ20 (b/h=16/15)	Φ25 (b/h=22/15)
Steel, Zinc-plated	Φ38x1.2	1.800.SDC.ACB			
	Φ50x1.5	1.800.SHC.ACB	1.800.SHC.ADB		
	Φ50x2.0	1.800.SWC.ACB	1.800.SWC.ADB		
	Φ60x2.0	1.800.SOC.ACB	1.800.SOC.ADB	1.800.SOC.AEB	
	Φ60x3.0		1.800.JLA.ADB		
	Φ76x3.0		1.800.JSA.ADB	1.800.JSA.AEB	
	Φ76x4.0			1.800.JRB.AEB	
	Φ80x3.0			1.800.J6A.AEB	
	Φ89x3.0			1.800.JYA.AEB	1.800.JYA.AKB
	Φ89x4.0			1.800.JUB.AEB	
High-strength steel, Zinc-plated	Φ76x2.0			1.800.GXA.AEB	
	Φ80x2.0			○	
Stainless steel (304)	Φ38x1.2	1.800.NDC.BCB			
	Φ50x1.5	1.800.NHC.BCB	1.800.NHC.BDB		
	Φ60x2.0	1.800.NOC.BCB	1.800.NOC.BDB	1.800.NOC.BEB	
	Φ76x3.0		1.800.NSC.BDB	1.800.NSC.BEB	
Aluminium	Φ38.2x1.5	1.800.AFC.ACB			
	Φ50x1.5	1.800.AHC.ACB	1.800.AHC.ADB		
	Φ60x2.0	1.800.AOC.ACB	1.800.AOC.ADB	1.800.AOC.AEB	
	Φ76x3.0		1.800.ASC.ADB	1.800.ASC.AEB	
	Φ80x4.0			1.800.ATC.AEB	

Φ50、60mm rollers can be fitted with PVC sleeve (2mm).
Φ50 rollers can be fitted with PU sleeve ((2mm/3mm).
PVC/PU sleeve is not anti-static.

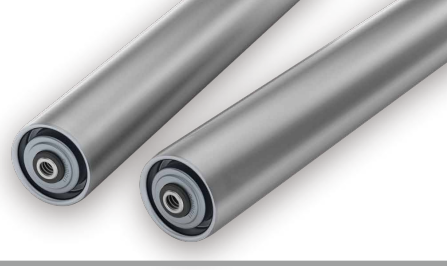

1800 Series Load Capacity

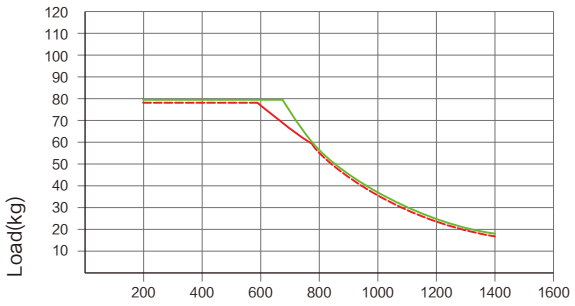

- Steel tube Φ38x1.2, shaft Φ12, internal thread
- Steel tube Φ38x1.2, shaft Φ12, spring loaded

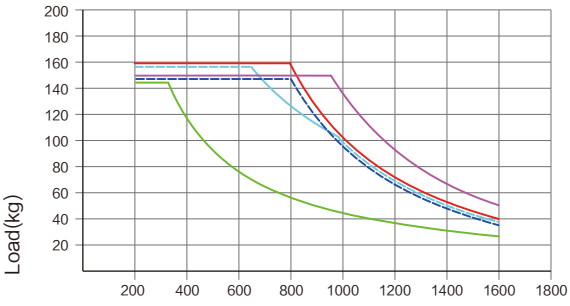

- Steel tube Φ50x1.5, shaft Φ15, internal thread
- Steel tube Φ50x1.5, shaft Φ15, spring loaded
- Steel tube Φ50x2.0, shaft Φ12, internal thread
- Steel tube Φ50x1.5, shaft Φ12, internal thread
- Steel tube Φ50x1.5/2.0, shaft Φ12, spring loaded

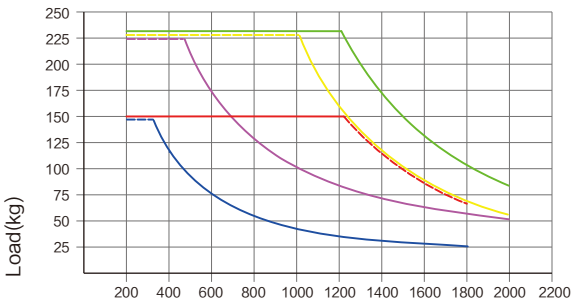

- Steel tube Φ60x3.0, shaft Φ15, internal thread
- Steel tube Φ60x2.0, shaft Φ15, internal thread
- Steel tube Φ60x3.0, shaft Φ15, spring loaded
- Steel tube Φ60x2.0, shaft Φ12, internal thread
- Steel tube Φ60x2.0, shaft Φ12, spring loaded

⚠ Above data shows the static load capacity of the roller for a uniformly distributed load.

1800 Series Load Capacity

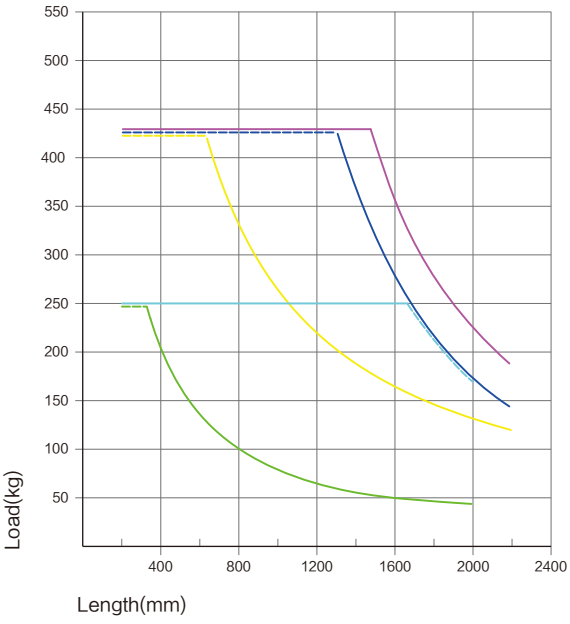

- Steel tube Φ76x4.0，shaft Φ20，internal thread
- Steel tube Φ76x3.0，shaft Φ20，internal thread
- Steel tube Φ76x3.0/4.0，shaft Φ20，spring loaded
- Steel tube Φ76x3.0，shaft Φ15, internal thread
- Steel tube Φ76x3.0，shaft Φ15，spring loaded

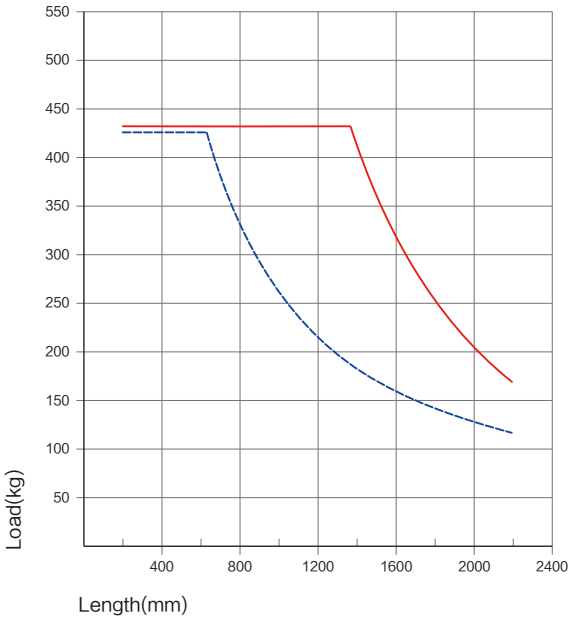

- Steel tube Φ80x3.0，shaft Φ20，internal thread
- Steel tube Φ80x3.0，shaft Φ20，spring loaded

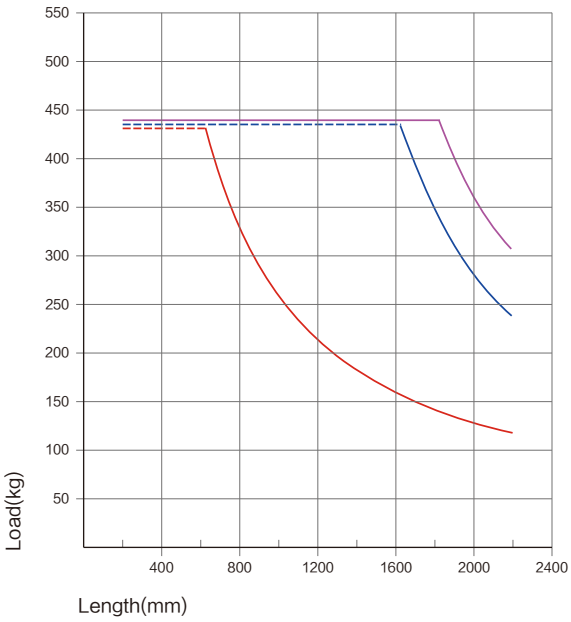

- Steel tube Φ89x4.0，shaft Φ20，internal thread
- Steel tube Φ89x3.0，shaft Φ20，internal thread
- Steel tube Φ89x3.0/4.0，shaft Φ20，spring loaded

⚠ Above data shows the static load capacity of the roller for a uniformly distributed load.





DRIVEN CONVEYING

Driven conveying transports goods steadily, reliably and with accurate speed. According to the driving method, it may be classified as “belt driven conveying” or “chian driven conveying”.

Belt driven:

Reliable, low noise, low environmental pollution, able to run at high speed. Oily working conditions should be avoided.

Chain driven:

High load capacity. Suitable for a wide range of work-ing environments including oil, water and high temperature however the chain is easily worn in a dusty environment. The conveying speed should not exceed 30m/min.

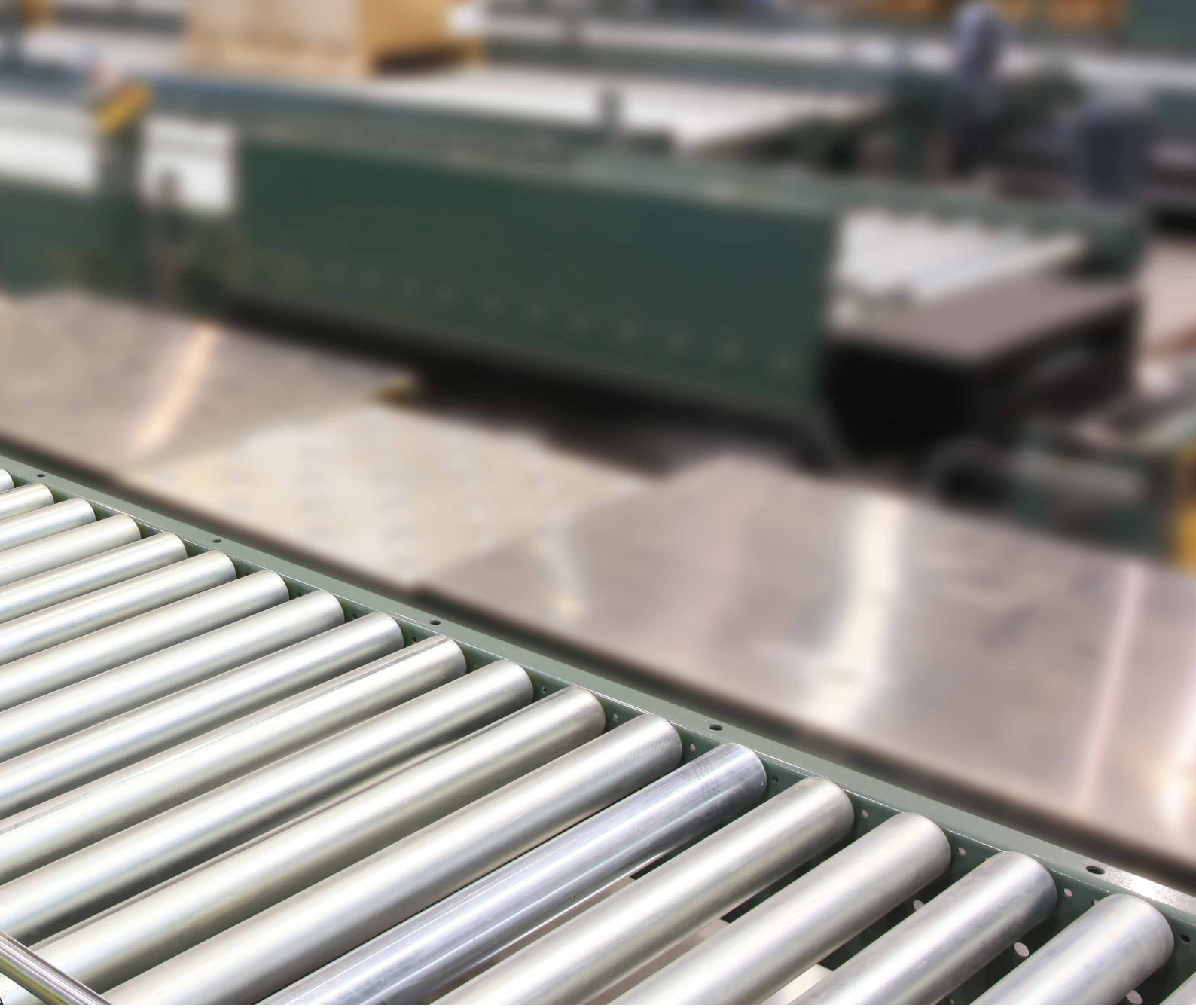

Rollers are listed according to their series and available features.

Product features	Series	Diameter	Driving Element	Page
O-belt drive, light/medium duty conveying, widely applied in carton conveying, custom groove position.	***2230/2240***	Φ48/50/60	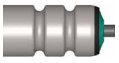	**36-41**
O-belt pulley, light/medium duty conveying, reliable.	***2260***	Φ50		**42-45**
Polymer poly-vee pulley, high speed, low noise.	***2250***	Φ48/50		**46-49**
Steel poly-vee pulley, steel bearing housing, medium-duty conveying, more adaptable in various environments.	***2890M***	Φ50		**50-52**
Polymer timing belt pulley,noslip , high speed, low noise	***2280***	Φ50		**53-55**
Polymer sprocket, polyamide bearing housing, medium duty conveying, low noise	***2214/2224***	Φ50/60		**56-58**
Steel sprocket, polymer bearing housing, medium/heavy duty conveying, attractive look.	***2411/2421***	Φ50/60/76/80	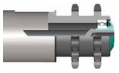	**59-62**
Steel sprocket, steel bearing housing, heavy duty conveying, strong and durable, suitable for many working environments.	***2311/2321***	Φ50/60/76/80/89	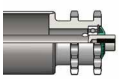	**63-67**



2230



2240

2230/2240 Series

Single/Double Grooved Conveyor Roller

Product Features

- Compared with chain drive, the O-belt drive has the advantages of low noise and high speed. It is widely used for light/medium duty carton conveying.
- The bearing end cap consists of a precision ball bearing, a polymer housing and end cap seal. Combined they provide an attractive, smooth and quite running roller.
- The design of the end cap protects the bearings by providing excellent resistance to dust and splashed water.
- The position of the grooves can be customized.
- Standard configuration with anti-static design surface impedance≤ 10^6 Ω。
- Temperature range: -5℃ ~ +40℃.
- Humidity range: 30%~ 90% RH (non-condensation).
  Please contact us if humidity out of this scope.

Specifications

Bearing Unit	
Bearing housing	Polyamide,black
End cap	Polyproylene, Damon green
Precision ball bearing	6002



About Conveying Duty

1.Duty is the maximum conveying capacity of driven roller (it's not roller's maximum load capacity)

2.In driven conveying, duty plays a decisive role.

3.The duty capacity of the rollers depend on the drive method and drive capacity of the O-belt.

single goods shaoul not over 30 kg.

Single Grooved Drive

1.The driving force for each roller is transmitted separately from the line shaft. It has a higher duty capacity in comparison to the double groove drive. Ideally suited for long conveyors. The maximum conveying length of each unit can be over 10 meters.

2.When used in curve conveyors, the line shaft is connected by universal joint couplings.

3.Maintenance is relatively difficult as you need to disassemble the entire line shaft.

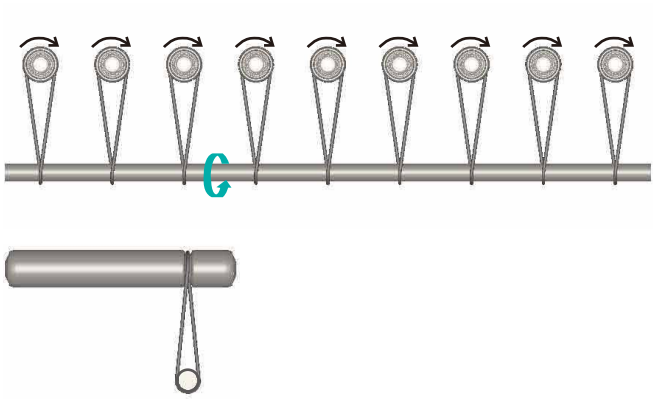

Single Grooved Drive Layout :

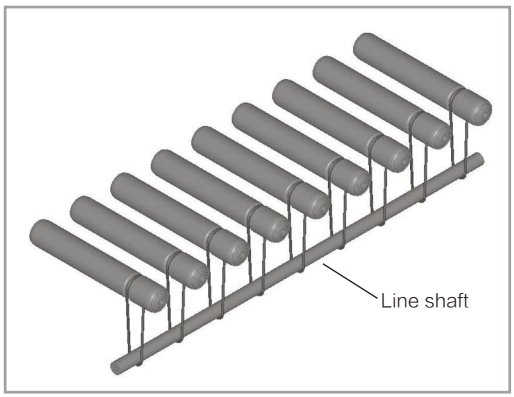

Double Grooved Drive

1.Simple arrangement. Easy installation and maintenance.

2.The driving torque deteriorates rapidly from roller to roller. Typically single MDR can only drive 7 to 8 rollers. The weight of single items to be conveyed should not exceed 30kg.

3.The preloading value is required for the length of O-belt loop. It may vary according to the different O-belt suppliers. Please check the specifications with the O-belt supplier. Typically, reduce the preloading value by 5% - 8% from the theoretical length of loop.

Double Grooved Drive Layout :

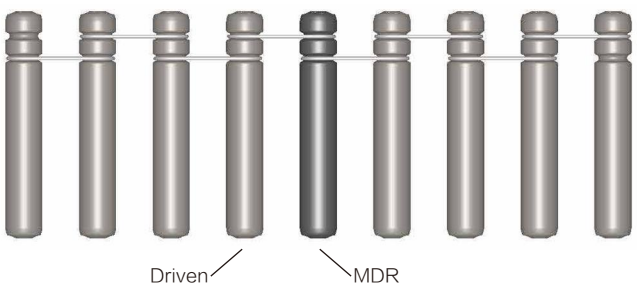



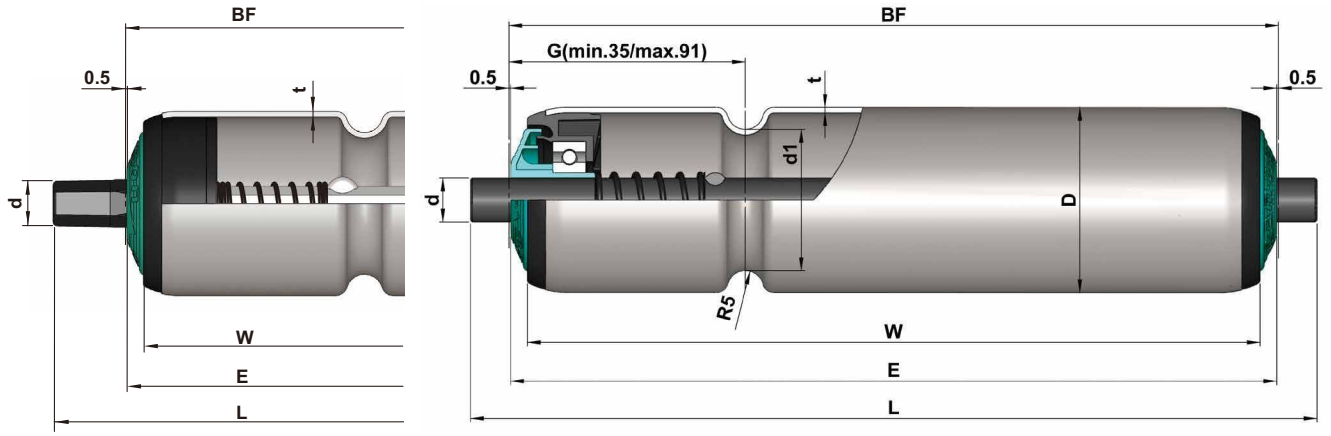

Polymer noiseless sleeve for shaft

2230 Series Spring Loaded

Tube Dia.(D)	Shaft Dia.(d)				G	d1
Φ48	Φ10/12/11hex	BF=W+10	E=W+9	L=W+31	65	Φ37.5
	11hex Polymer noiseless sleeve for shaft	BF=W+10	E=W+9	L=W+49	65	Φ37.5
Φ50	Φ8/10/12/11hex	BF=W+10	E=W+9	L=W+31	65	Φ38.5
	11hex Polymer noiseless sleeve for shaft	BF=W+10	E=W+9	L=W+49	65	Φ38.5
Φ60	Φ10/12/11hex	BF=W+10	E=W+9	L=W+31	65	Φ48.0

Tube	D*T	Shaft Dia.(d)				
		Φ8	Φ10	11hex	11hex Polymer noiseless sleeve for shaft	Φ12
Steel, zinc plated	Φ48.6x1.5		2.230.JGA.AMA	2.230.JGA.AFA	2.230.JGA.AHA	2.230.JGA.ACA
	Φ50x1.5	2.230.SHC.ABA	2.230.SHC.AMA	2.230.SHC.AFA	2.230.SHC.AHA	2.230.SHC.ACA
	Φ60x2.0		2.230.SOC.AMA	2.230.SOC.AFA	2.230.SOC.AHA	2.230.SOC.ACA
Steel, zinc plated with PVC sleeve (2mm)	Φ50x1.5	2.230.SHD.ABA	2.230.SHD.AMA	2.230.SHD.AFA	2.230.SHD.AHA	2.230.SHD.ACA
Stainless steel (304)	Φ48.6x1.5		2.230.NGC.BMA	2.230.NGC.BFA	2.230.NGC.AHA	2.230.NGC.BCA
	Φ50x1.5	2.230.NHC.BBA	2.230.NHC.BMA	2.230.NHC.BFA	2.230.NHC.AHA	2.230.NHC.BCA
	Φ60x2.0		2.230.NOC.BMA	2.230.NOC.BFA	2.230.NOC.AHA	2.230.NOC.BCA

Φ60 rollers can be fitted with PVC sleeve (2mm)
Φ50 rollers can be fitted with PU sleeve (2mm/3mm)
PVC/PU sleeve is not anti-static.

⚠ Polymer noiseless sleeve for shaft roller：

① Actual frame width= E+（1~3）mm，Excessive width inside the frame will damage the shaft core and roller

② Applicable mounting hole range：11.2~11.7mm（edge to edge）



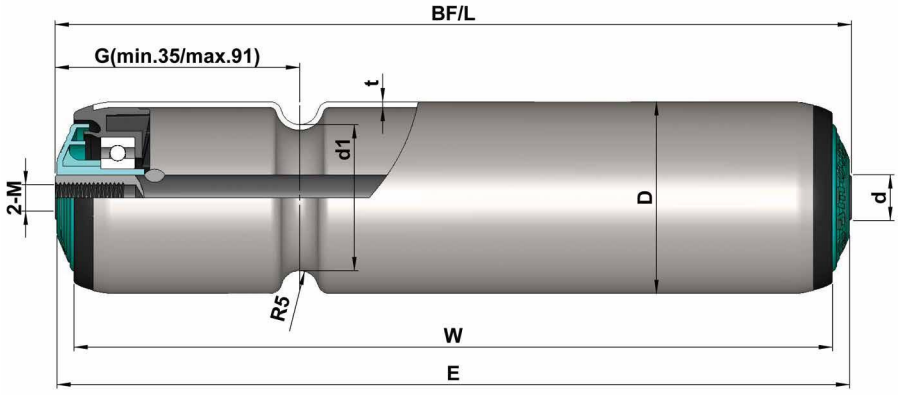

2230 Series Internal Thread

Tube Dia.(D)	Shaft Dia.(d)				G	d1
Φ48	Φ14/15	BF=W+10	E=W+9	L=W+10	65	Φ37.5
Φ50	Φ14/15	BF=W+10	E=W+9	L=W+10	65	Φ38.5
Φ60	Φ14/15	BF=W+10	E=W+9	L=W+10	65	Φ48.0

Tube	D*T	Shaft Dia.(d)	
		Φ14 (M8)	Φ15 (M10x20)
Steel, zinc plated	Φ48.6x1.5	2.230.JGA.BLC	2.230.JGA.ADC
	Φ50x1.5	2.230.SHC.BLC	2.230.SHC.ADC
	Φ60x2.0	2.230.SOC.BLC	2.230.SOC.ADC
Steel, zinc plated with PVC sleeve (2mm)	Φ50x1.5	2.230.SHD.BLC	2.230.SHD.ADC
Stainless steel (304)	Φ48.6x1.5	2.230.NGC.BLC	2.230.NGC.BDC
	Φ50x1.5	2.230.NHC.BLC	2.230.NHC.BDC
	Φ60x2.0	2.230.NOC.BLC	2.230.NOC.BDC

Φ60 rollers can be fitted with PVC sleeve (2mm)
Φ50 rollers can be fitted with PU sleeve (2mm/3mm).
PVC/PU sleeve is not anti-static.

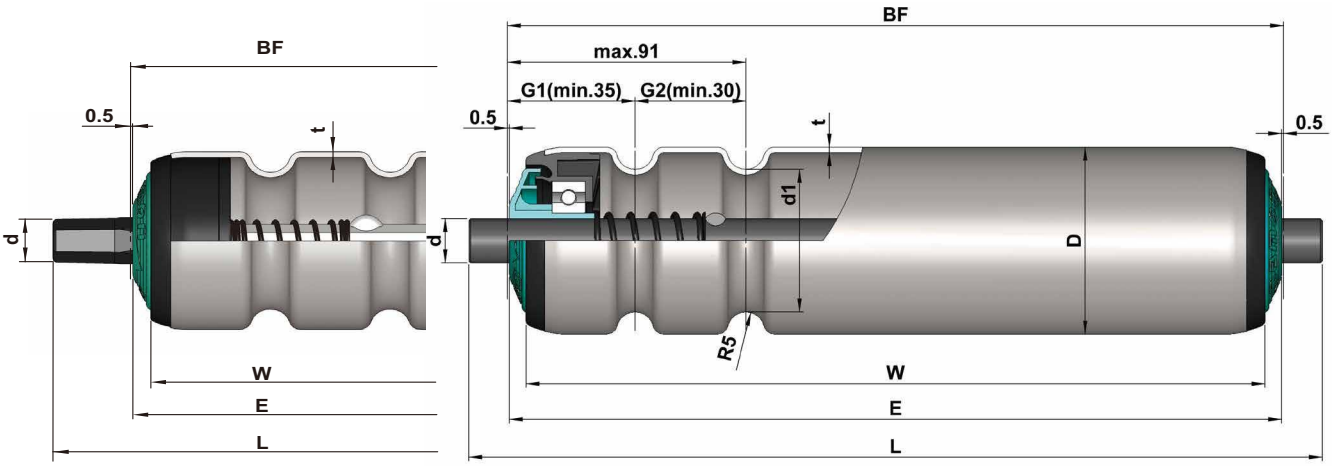

Polymer noiseless sleeve for shaft

2240 Series Spring Loaded

Tube Dia.(D)	Shaft Dia.(d)				G1	G2	d1
Φ48	Φ10/12/11hex	BF=W+10	E=W+9	L=W+31	35	30	Φ37.5
	11hex Polymer noiseless sleeve for shaft	BF=W+10	E=W+9	L=W+49	35	30	Φ37.5
Φ50	Φ8/10/12/11hex	BF=W+10	E=W+9	L=W+31	35	30	Φ38.5
	11hex Polymer noiseless sleeve for shaft	BF=W+10	E=W+9	L=W+49	35	30	Φ38.5
Φ60	Φ10/12/11hex	BF=W+10	E=W+9	L=W+31	35	30	Φ48.0

Tube	D*T	Shaft Dia.(d)				
		Φ8	Φ10	11hex	11hex Polymer noiseless sleeve for shaft	Φ12
Steel, zinc plated	Φ48.6x1.5		2.240.JGA.AMA	2.240.JGA.AFA	2.240.JGA.AHA	2.240.JGA.ACA
	Φ50x1.5	2.240.SHC.ABA	2.240.SHC.AMA	2.240.SHC.AFA	2.240.SHC.AHA	2.240.SHC.ACA
	Φ60x2.0		2.240.SOC.AMA	2.240.SOC.AFA	2.240.SOC.AHA	2.240.SOC.ACA
Steel, zinc plated with PVC sleeve (2mm)	Φ50x1.5	2.240.SHD.ABA	2.240.SHD.AMA	2.240.SHD.AFA	2.240.SHD.AHA	2.240.SHD.ACA
Stainless steel (304)	Φ48.6x1.5		2.240.NGC.BMA	2.240.NGC.BFA	2.240.NGC.AHA	2.240.NGC.BCA
	Φ50x1.5	2.240.NHC.BBA	2.240.NHC.BMA	2.240.NHC.BFA	2.240.NHC.AHA	2.240.NHC.BCA
	Φ60x2.0		2.240.NOC.BMA	2.240.NOC.BFA	2.240.NOC.AHA	2.240.NOC.BCA

Φ60 rollers can be fitted with PVC sleeve (2mm)
Φ50 rollers can be fitted with PU sleeve (2mm/3mm).
PVC/PU sleeve is not anti-static.

⚠ Polymer noiseless sleeve for shaft roller：
① Actual frame width= E+（1~3）mm，Excessive width inside the frame will damage the shaft core and roller
② Applicable mounting hole range：11.2~11.7mm（edge to edge）



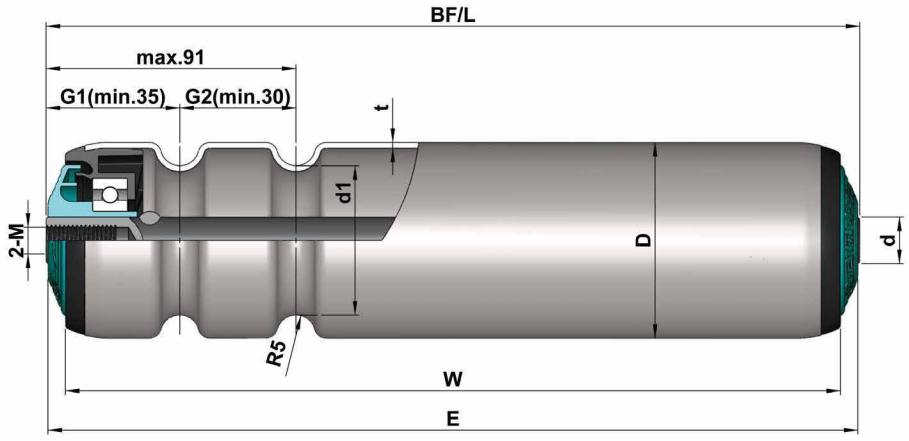

2240 Series Internal Thread

Tube Dia.(D)	Shaft Dia.(d)				G1	G2	d1
Φ48	Φ14/15	BF=W+10	E=W+9	L=W+10	35	30	Φ37.5
Φ50	Φ14/15	BF=W+10	E=W+9	L=W+10	35	30	Φ38.5
Φ60	Φ14/15	BF=W+10	E=W+9	L=W+10	35	30	Φ48.0

Tube	D*T	Shaft Dia.(d)	
		Φ14 (M8)	Φ15 (M10x20)
Steel, zinc plated	Φ48.6x1.5	2.240.JGA.BLC	2.240.JGA.ADC
	Φ50x1.5	2.240.SHC.BLC	2.240.SHC.ADC
	Φ60x2.0	2.240.SOC.BLC	2.240.SOC.ADC
Steel, zinc plated with PVC sleeve (2mm)	Φ50x1.5	2.240.SHD.BLC	2.240.SHD.ADC
Stainless steel (304)	Φ48.6x1.5	2.240.NGC.BLC	2.240.NGC.BDC
	Φ50x1.5	2.240.NHC.BLC	2.240.NHC.BDC
	Φ60x2.0	2.240.NOC.BLC	2.240.NOC.BDC

Φ60 rollers can be fitted with PVC sleeve (2mm)
Φ50 rollers can be fitted with PU sleeve (2mm/3mm).
PVC/PU sleeve is not anti-static.



2260 Series

O-Belt Pulley Conveyor Roller

Product Features

- The O-belt pulley is located the end of the roller which separates the drive area and the conveying area avoiding interference between the O-belt and the conveyed goods.
- The bearing end cap consists of a precision ball bearing, a polymer housing and end cap seal. Combined they provide an attractive, smooth and quite running roller.
- The design of the end cap protects the bearings by providing excellent resistance to dust and splashed water.
- Because there is no grooving of the tube, the tube will not have any distortion and the roller will run more smoothly.
- Standard configuration with anti-static design surface impedance≤ $10^6\Omega$。
- Temperature range: -5℃ ~ +40℃.
- Humidity range: 30%~ 90% RH (non-condensation).
  Please contact us if humidity out of this scope.

Specifications

Bearing unit	
Bearing housing	Polyamide, black
End cap	Polyproylene, Damon green
Precision ball bearing	6002
Drive Element	
O-belt pulley	Polyamide, black



About Conveying Duty

1.Duty is the maximum conveying capacity of driven roller (it's not roller's maximum load capacity) For more information about the load capacity , refer to the load capacity of 1200 series dia 50 roller on Page 27.

2.In driven conveying, duty plays a decisive role.

3.The duty capacity of the rollers depend on the drive method and drive capacity of the O-belt. Single items should not exceed 30kg.

Double Groove Pulley Drive

1.Simple arrangement. Easy installation and maintenance.

2.The driving torque deteriorates rapidly from roller to roller. Typically single MDR can only drive 7 to 8 rollers. The weight of single items to be conveyed should not exceed 30kg.

3.The preloading value is required for the length of O-belt loop. It may vary according to the different O-belt suppliers. Please check the specifications with the O-belt supplier. Typically, reduce the preloading value by 5% - 8% from the theoretical length of loop.

Double Groove Pulley Drive Layout:

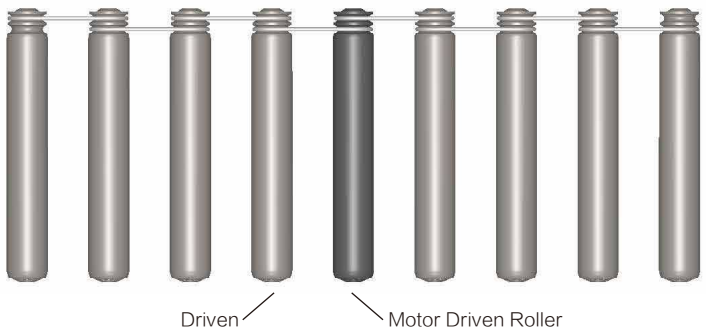

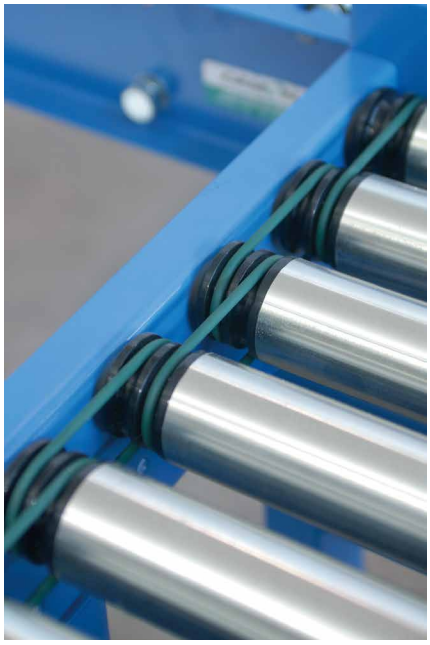

Different Series Layout:

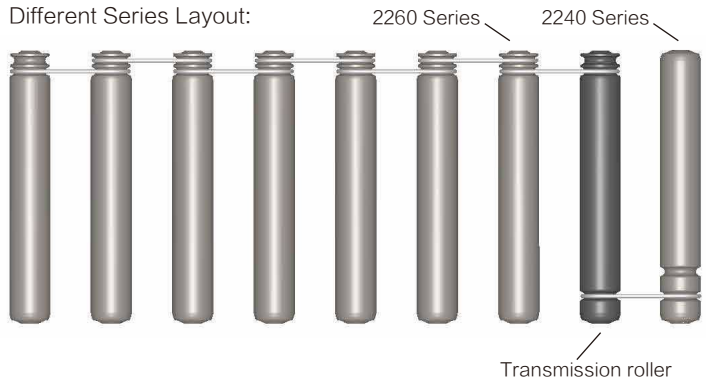

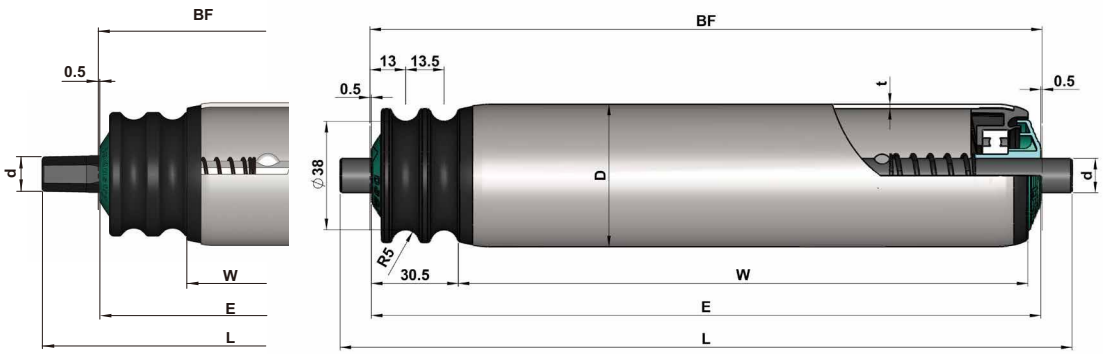

Polymer noiseless sleeve for shaft

2260 Series Spring Loaded

Tube Dia.(D)	Shaft Dia.(d)			
Φ50	Φ10/12/11hex	BF=W+36	E=W+35	L=W+57
	11hex Polymer noiseless sleeve for shaft	BF=W+36	E=W+35	L=W+75

Tube	Shaft Dia.(d)				
	D*T	Φ10	11hex	11hex Polymer noiseless sleeve for shaft	Φ12
Steel, zinc plated	Φ50x1.5	2.260.SHC.AMA	2.260.SHC.AFA	2.260.SHC.AHA	2.260.SHC.ACA
Steel, zinc plated with PVC sleeve (2mm)	Φ50x1.5	2.260.SHD.AMA	2.260.SHD.AFA	2.260.SHD.AHA	2.260.SHD.ACA
Stainless steel(304)	Φ50x1.5	2.260.NHC.BMA	2.260.NHC.BFA	2.260.NHC.AHA	2.260.NHC.BCA
Aluminium	Φ50x1.5	2.260.AHC.AMA	2.260.AHC.AFA	2.260.AHC.AHA	2.260.AHC.ACA

Φ50 rollers can be fitted with PU sleeve (2mm/3mm).PVC/PU sleeve is not anti-static.

⚠ Polymer noiseless sleeve for shaft roller：

① Actual frame width= E+（1~3）mm，Excessive width inside the frame will damage the shaft core and roller

② Applicable mounting hole range：11.2~11.7mm（edge to edge）



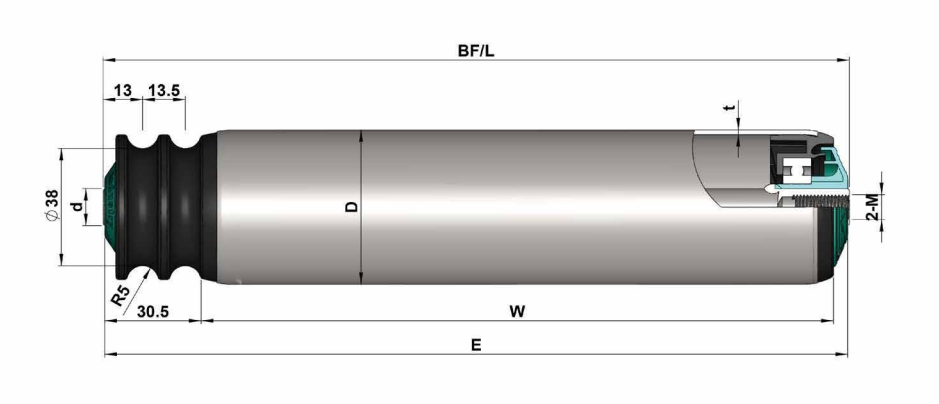

2260 Series Internal Thread

Tube Dia.(D)	Shaft Dia.(d)			
Φ50	Φ14/15	BF=W+36	E=W+35	L=W+36

Tube	D*T	Shaft Dia.(d)	
		Φ14 (M8)	Φ15 (M10x20)
Steel, zinc plated	Φ50x1.5	2.260.SHC.BLC	2.260.SHC.ADC
Steel, zinc plated with PVC sleeve (2mm)	Φ50x1.5	2.260.SHD.BLC	2.260.SHD.ADC
Stainless steel(304)	Φ50x1.5	2.260.NHC.BLC	2.260.NHC.BDC
Aluminium	Φ50x1.5	2.260.AHC.BLC	2.260.AHC.ADC

Φ50 rollers can be fitted with PU sleeve (2mm/3mm).PVC/PU sleeve is not anti-static.



2250 Series

Poly-Vee Conveyor Roller

Product Features

- The poly-vee pulley is located at the end of the roller which separates the drive area and the conveying area making the conveying smooth, high speed and low noise.
- The bearing end cap consists of a precision ball bearing, a polymer housing and end cap seal. Combined they provide an attractive, smooth and quite running roller.
- The design of the end cap protects the bearings by providing excellent resistance to dust and splashed water.
- PJ series poly-vee. Total of 9 grooves at 2.34mm pitch.
- Various PJ belt lengths available to suit different pitch of rollers.
- Suitable for the high speed applications. Maximum speed varies with roller length and diameter. Maximum speed up to 2~3m/s.
- Standard configuration with anti-static design surface impedance≤$10^{6}\Omega$。
- Temperature range: -5℃ ~ +40℃.
- Humidity range: 30%~ 90% RH (non-condensation).
  Please contact us if humidity out of this scope.

Specifications

Bearing Unit	
Bearing housing	Polyamide, black
End cap	Polyproylene, Damon green
Precision ball bearing	6002
Drive Element	
Poly-vee pulley	Polyamide,black

Poly-vee belts are available.



About Conveying Duty

1.Duty is the maximum conveying capacity of driven roller (it's not roller's maximum load capacity) For more information about the load capacity , refer to the load capacity of 1200 series dia 50 roller on Page 27.

2.In driven conveying, duty plays a decisive role.

3.The duty capacity of the roller is based on the drive method and the type of Poly-vee belt. The duty rating is high when fewer rollers are driven or selecting the 3 or 4 groove Poly-vee belt.

4.The duty capacity for each unit can be as high as 100kg when the 3 groove poly-vee belt is used.

Roller Center Pitch

Poly-vee belt selection according to the roller pitch, please refer to the following chart:

Roller pitch(mm)	Types of poly-vee belt	
60~63	2PJ256	3PJ256
73~75	2PJ286	3PJ286
87~91	2PJ314	3PJ314
97~101	2PJ336	3PJ336
119~121	2PJ376	3PJ376
123~128	2PJ388	3PJ388
129~134	2PJ416	3PJ416
142~147	2PJ435	3PJ435

If you have other spacing requirements, please contact us.

Roller Installation

To avoid incorrect installation, an appropriate method and a suitable tool is required to install poly-vee rollers.



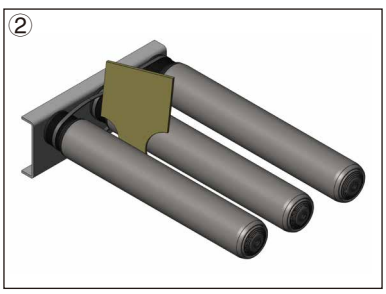

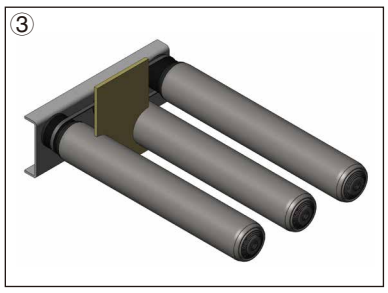



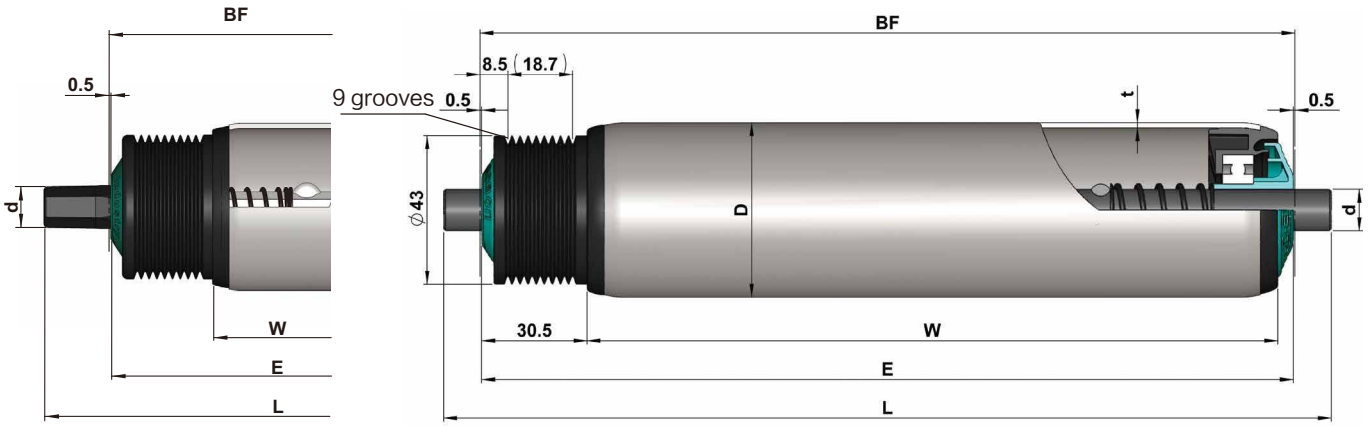

Polymer noiseless sleeve for shaft

2250 Series Spring Loaded

Tube Dia.(D)	Shaft Dia.(d)			
Φ48	Φ10/12/11hex	BF=W+36	E=W+35	L=W+57
	11hex（Polymer noiseless sleeve for shaft）	BF=W+36	E=W+35	L=W+75
Φ50	Φ10/12/11hex	BF=W+36	E=W+35	L=W+57
	11hex（Polymer noiseless sleeve for shaft）	BF=W+36	E=W+35	L=W+75

Tube	Shaft Dia.(d)				
	D*T	Φ10	11hex	11hex Polymer noiseless sleeve for shaft	Φ12
Steel, zinc plated	Φ48.6x1.5	2.250.JGA.AMA	2.250.JGA.AFA	2.250.JGA.AHA	2.250.JGA.ACA
	Φ50x1.5	2.250.SHC.AMA	2.250.SHC.AFA	2.250.SHC.AHA	2.250.SHC.ACA
Steel, zinc plated with PVC sleeve (2mm)	Φ50x1.5	2.250.SHD.AMA	2.250.SHD.AFA	2.250.SHD.AHA	2.250.SHD.ACA
Stainless steel (304)	Φ48.6x1.5	2.250.NGC.BMA	2.250.NGC.BFA	2.250.NGC.AHA	2.250.NGC.BCA
	Φ50x1.5	2.250.NHC.BMA	2.250.NHC.BFA	2.250.NHC.AHA	2.250.NHC.BCA
Aluminium	Φ50x1.5		2.250.AHC.AFA	2.250.AHC.AHA	2.250.AHC.ACA

Φ50 rollers can be fitted with PU sleeve (2mm/3mm).PVC/PU sleeve is not anti-static.

⚠ Polymer noiseless sleeve for shaft roller：

① Actual frame width= E+（1~3）mm，Excessive width inside the frame will damage the shaft core and roller

② Applicable mounting hole range：11.2~11.7mm（edge to edge）

Please choose the steel Poly-Vee roller when you must use 4PJ belt.



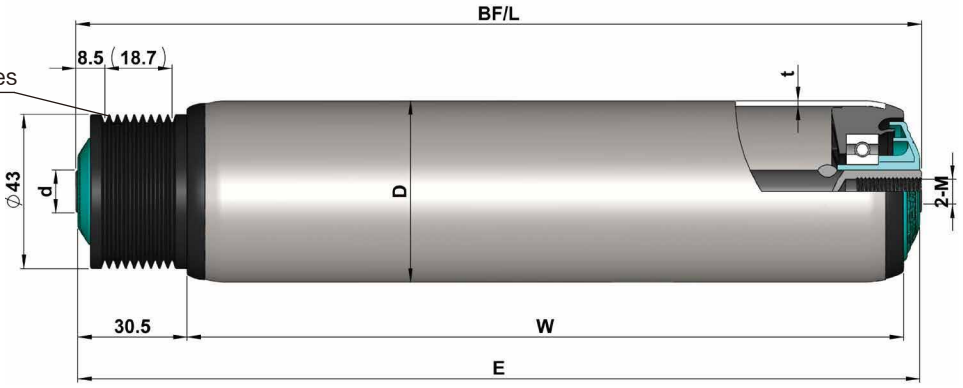

2250 Series Internal Thread

Tube Dia.(D)	Shaft Dia.(d)			
Φ48	Φ14/15	BF=W+36	E=W+35	L=W+36
Φ50	Φ14/15	BF=W+36	E=W+35	L=W+36

Tube	D*T	Shaft Dia.(d)	
		Φ14 (M8)	Φ15 (M10x20)
Steel, zinc plated	Φ48.6x1.5	2.250.JGA.BLC	2.250.JGA.ADC
	Φ50x1.5	2.250.SHC.BLC	2.250.SHC.ADC
Steel, zinc plated with PVC sleeve (2mm)	Φ50x1.5	2.250.SHD.BLC	2.250.SHD.ADC
Stainless steel (304)	Φ48.6x1.5	2.250.NGC.BLC	2.250.NGC.BDC
	Φ50x1.5	2.250.NHC.BLC	2.250.NHC.BDC
Aluminium	Φ50x1.5	2.250.AHC.BLC	2.250.AHC.ADC

Φ50 rollers can be fitted with PU sleeve (2mm/3mm).PVC/PU sleeve is not anti-static.

⚠ Please choose the steel Poly-Vee roller when you must use 4PJ belt.

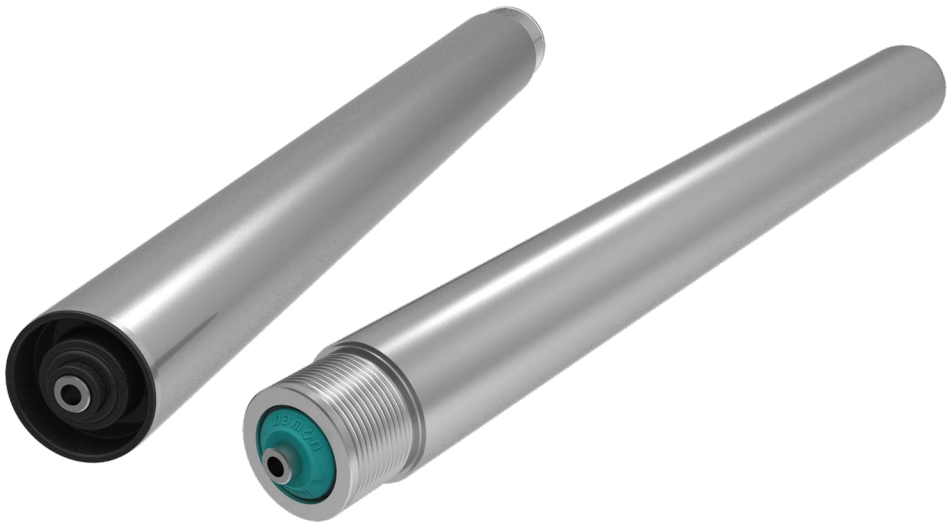

2890M Series

Medium-duty Poly-vee Conveyor Roller

Product Features

- The steel poly-vee pulley is firmly welded on the steel tube. The maximum driving capacity for each zone can reach 300kg.
- The precision ball bearing is pressed tightly into the steel bearing housing for high load capacity.
- PJ type; 11 grooves with 2.34mm pitch.
- Different poly-vee belt series are for different roller center pitch (see the attached table).
- The steel poly-vee pulley roller is more adaptable than polymer ones.
- Temperature range: -5℃~ +40℃
- Humidity range: as low as 2% RH.
  Please contact us if humidity out of this scope.

Specifications

Bearing Unit	
Bearing housing	Steel
Ground sleeve	Polyamide，black
Precision ball bearing	6001/6002

Drive Element	
Poly-vee pulley	Steel, decorative chromium plated

Poly-vee belts are available.



About Conveying Duty

1.Duty is the maximum conveying capacity of driven roller (it's not roller's maximum load capacity) For more information about the load capacity , refer to the load capacity of 1200 series dia 50 roller on Page 27.

2.In driven conveying, duty plays a decisive role.

3. The duty capacity for each unit can be as high as 300kg when the 5 groove poly-vee belt is used.

Roller Center Pitch

Please refer to the following table for the regular pitch and the corresponding poly-vee belt series:

Center distance(mm)	Type of poly-vee belts	
60~63	4PJ256	5PJ256
73~75	4PJ286	5PJ286
87~91	4PJ314	5PJ314
97~101	4PJ336	5PJ336
119~121	4PJ376	5PJ376
123~128	4PJ388	5PJ388
129~134	4PJ416	5PJ416
142~147	4PJ435	5PJ435

If you have other spacing requirements, please contact us.

Solution Shematic Diagram

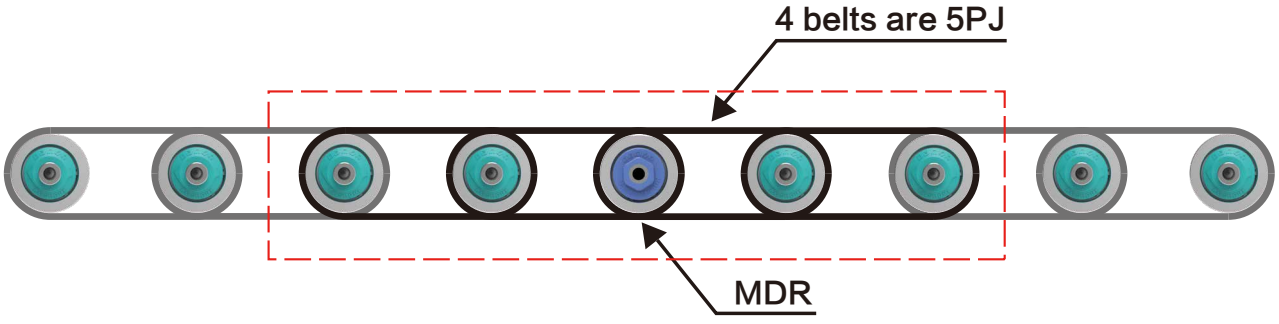

5PJ poly-vee belt must be applied to the four poly-vee belts near to the MDR or drive poly-vee pulley (2 belts separately on the left and right sides), and 4PJ can be applied to the rest belts.
The overall performance will be better when 5PJ is applied to all belts (the Hutchinson brand is recommended).
Each single MDR (middle drive) can drive no more than 14 pieces of poly-vee roller.

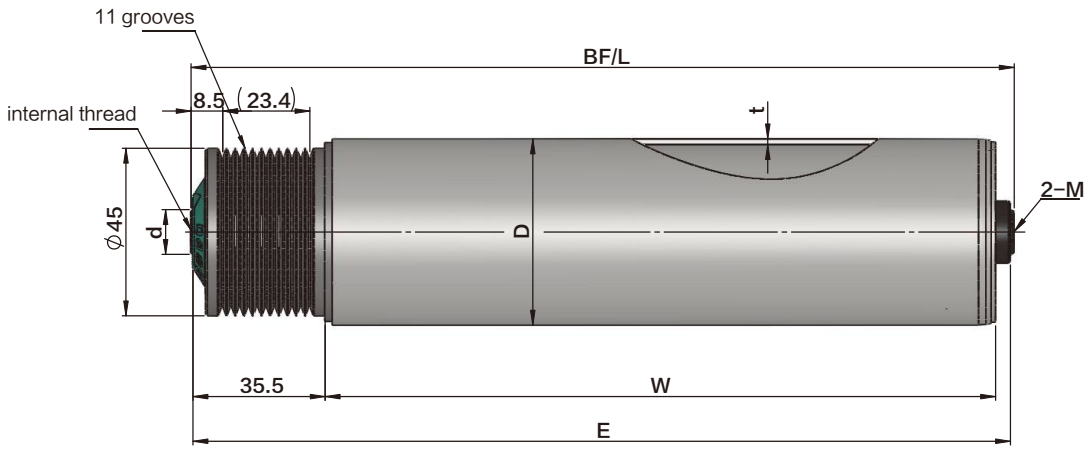

2890M Series Internal Thread

Tube Dia.(D)	Shaft Dia.(d)			
Φ50	Φ12	BF=W+41	E=W+39.5	L=W+41
	Φ15	BF=W+42	E=W+40.5	L=W+42

Tube	D*T	Shaft Dia.(d)	
		Φ14 (M8)	Φ15 (M10x20)
Steel, zinc plated	Φ50x1.5	2.890M.SHC.ACC	2.890M.SHC.ADC
Stainless steel (304)		2.890M.NHC.ACC	2.890M.NHC.ADC

stainless steel 304 tube with black bearing housing.
Zinc plate steel tube with zinc plated steel bearing housing.





2280 Series

Timing Belt Pulley Conveyor Roller

Product Features

- The polymer timing pulley is installed at the end of the roller, which makes the drive and conveying separate in the zone. The conveying is more stable and has the characteristics of high speed and low noise.
- The bearing end cap consists of a precision ball bearing, a polymer housing and end cap seal. Combined they provide an attractive, smooth and quite running roller.
- The design of the end cap protects the bearings by providing excellent resistance to dust and splashed water.
- larger transmission capability, compact structure, tensioning-free mechanism and simple design.
- It is more efficient without slip in conveying.
- The T5 tooth shape design is suitable for the roller conveyor with higher versatile.
- Its positioning is precise with the use of MDR to meet the application requirements of the load section.
- It is suitable for clean room and other harsh environment with the use of PU synchronous belt.
- Compared with traditional belt drive, it is waterproof (no skidding) and has the ability to work in a certain bad environment.
- It needs no lubrication with easy maintenance.
- Different timing belt models match the different center distance of the roller. (see the appendix)
- Suitable for the high speed applications. Maximum speed varies with roller length and diameter. Maximum speed up to 2~3m/s.
- Standard configuration with anti-static design surface impedance≤ $10^6\Omega$。
- Temperature range: -5℃~ +40℃.
- Humidity range: 30%~ 90% RH (non-condensation).
  Please contact us if humidity out of this scope.

Specifications

Bearing Unit	
Bearing housing	Polyamide, black
End cap	Polypropylene,Damon green
Precision ball bearing	6002

Drive Element	
Timing pulley	Polyamide, black

About Conveying Duty

1.Duty is the maximum conveying capacity of driven roller (it's not roller's maximum load capacity) For more information about the load capacity , refer to the load capacity of 1200 series dia 50 roller on Page 27.

2.In driven conveying, duty plays a decisive role.

3.The duty capacity of the roller depends on the conveying arrangement and the mode of the timing belt. In general, the duty capacity of the single zone can achieve100kg.

Roller Center Pitch

The center distance of the timing belt arrangement is strictly limited (recommended tolerance: +0.5/0mm).
The common pitch and the timing belt type with it are shown in the following table:

synchronous belt wide：10mm

Center distance(mm)	Type of timing belt	Teeth number of timing belt
60	10-T5-250	50
75	10-T5-280	56
85	10-T5-300	60
100	10-T5-330	66
105	10-T5-340	68
135	10-T5-400	80
145	10-T5-420	84
160	10-T5-450	90

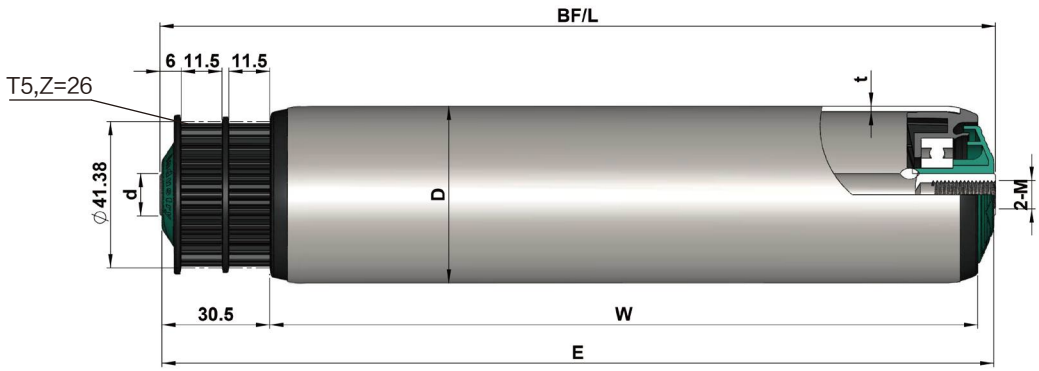

2280 Series Internal Thread

Tube Dia.(D)	Shaft Dia.(d)			
Φ50	Φ14/15	BF=W+36	E=W+35	L=W+36

Tube	D*T	Shaft Dia. (d)	
		Φ14 (M8)	Φ15 (M10x20)
Steel, zinc plated	Φ50x1.5	2.280.SHC.BLC	2.280.SHC.ADC
Steel, zinc plated with PVC sleeve (2mm)	Φ50x1.5	2.280.SHD.BLC	2.280.SHD.ADC
Stainless steel(304)	Φ50x1.5	2.280.NHC.BLC	2.280.NHC.BDC
Aluminium	Φ50x1.5	2.280.AHC.BLC	2.280.AHC.ADC

Φ50 rollers can be fitted with PU sleeve (2mm/3mm)，PVC/PU sleeve is not anti-static.



Single Chain Sprocket Drive

1.The compact construction is suitable for medium/low speed, continuous operation.

2.Typically the conveyor is equipped with a chain tensioner.

3.When considering the maximum duty of the single roller, you should also consider the ultimate tension of the chain under conveyor full drive conditions.

4.Compared with the double chain drive, the choice of roller pitch is more flexible and not determined by the chain pitch.

Single chain layout：

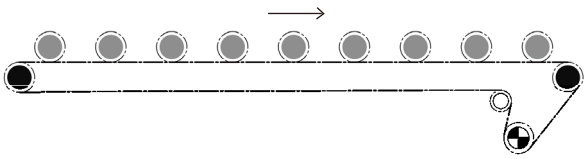

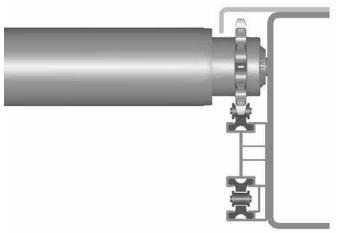

Double Chain Sprocket Drive

1.Suitable for heavy duty loads and frequent start/stop operation.

2.To obtain the best roller drive transmission, the drive should be located in the centre of the conveyor.

Double chain arrangement:

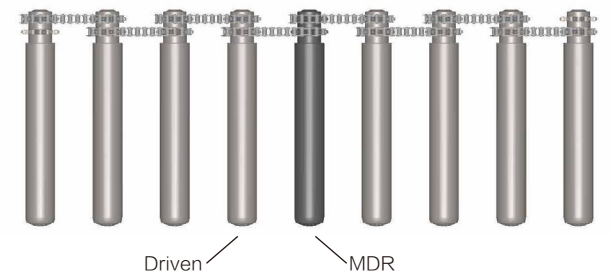

3.Compared with single sprocket drive, the conveying speed is higher. Maximum speed: 30m/min.

4.The roller pitch is limited, please see below.

T=n*p/2

Note：n——Integer，1、2、3、……
p——Chain pitch

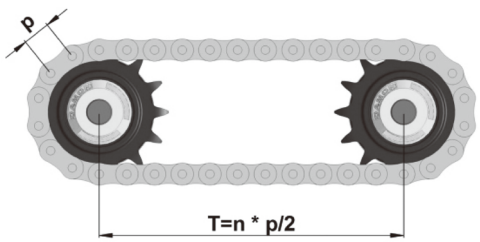

Avoid half pitch chain. Please use the chart below for the chain pitch.

Unit：mm

Type	Pitch	Center distance(T)					Tolerence
08B11T	12.7	69.8	82.5	95.2	107.9	120.6	0/-0.4
08B14T	12.7	88.9	101.6	114.3	127	139.7	0/-0.4
10A13T	15.875	119	134.9	150.8	166.6	182.5	0/-0.7
10B15T	15.875	134.9	150.8	166.6	182.5	198.4	0/-0.7



2214



2224

2214/2224 Series

Polymer Single/Double Sprocket Roller

Product Features

- Using the polyamide sprocket roller as the drive element greatly reduces the running noise.
- The bearing end cap consists of a precision ball bearing, a polymer housing and end cap seal. Combined they provide an attractive, smooth and quite running roller.
- The design of the end cap protects the bearings by providing excellent resistance to dust and splashed water.
- The weight of the goods to be conveyed should not exceed 150kg.
  Standard configuration with anti-static design surface impedance≤ $10^6\Omega$。
- Temperature range: -5℃ ~ +40℃.
- Humidity range: 30%~ 90% RH (non-condensation).
  Please contact us if humidity out of this scope.

Specifications

Bearing Unit	
Bearing housing	Polyamide, black
End cap	Polyproylene, Damon green
Precision ball bearing	6002
Drive Element	
Sprocket	Polyamide,black



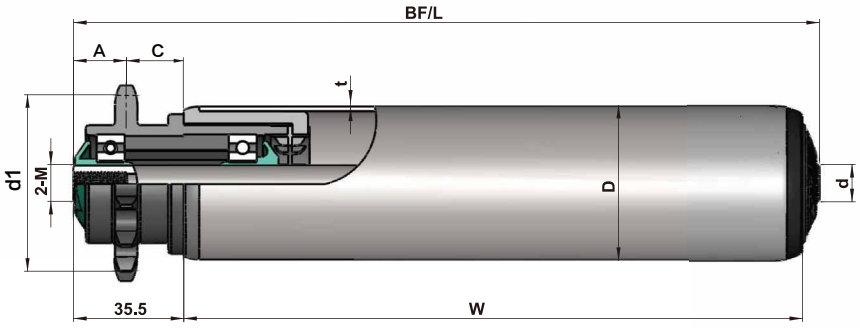

2214 Series Internal Thread

Tube Dia.(D)	Shaft Dia.(d)		Spocket style	A	C	d1
Φ50	Φ12/15	BF/L=W+41	08B14T	17	18.5	57.07
Φ60	Φ12/15	BF/L=W+41	08B14T	17	18.5	57.07

Tube	D*T	Shaft Dia.(d)	
		Φ12 (M8x15)	Φ15 (M10x20)
Steel, zinc plated	Φ50x1.5	2.214.SHC.ACC	2.214.SHC.ADC
	Φ60x2.0	2.214.SOC.ACC	2.214.SOC.ADC
Stainless steel (304)	Φ50x1.5	2.214.NHC.BCC	2.214.NHC.BDC
	Φ60x2.0	2.214.NOC.BCC	2.214.NOC.BDC
Aluminium	Φ50x1.5	2.214.AHC.ACC	2.214.AHC.ADC
	Φ60x2.0	2.214.AOC.ACC	2.214.AOC.ADC
PVC	Φ50x2.5	2.214.P8C.BCC	2.214.P8C.BDC

Φ50、60 rollers can be fitted with PVC sleeve (2mm)
Φ50 rollers can be fitted with PU sleeve (2mm/3mm).
PVC/PU sleeve is not anti-static.

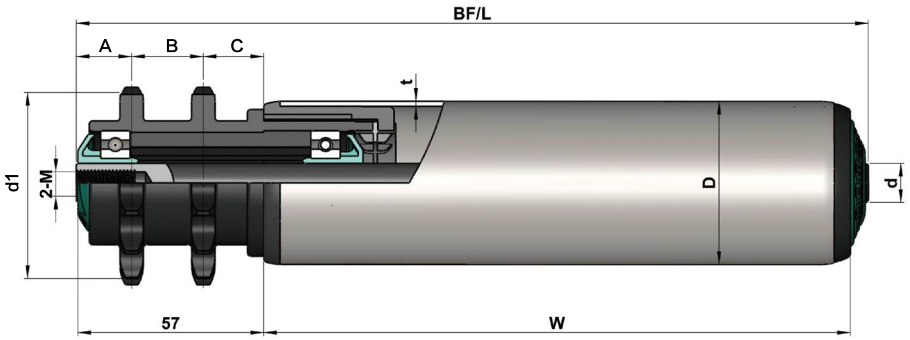

2224 Series Internal Thread

Tube Dia.(D)	Shaft Dia.(d)		Spocket style	A	B	C	d1
Φ50	Φ12/15	BF/L=W+63	08B14T	17	22	18.5	57.07
Φ60	Φ12/15	BF/L=W+63	08B14T	17	22	18.5	57.07

Tube	D*T	Shaft Dia.(d)	
		Φ12 (M8x15)	Φ15 (M10x20)
Steel, zinc plated	Φ50x1.5	2.224.SHC.ACC	2.224.SHC.ADC
	Φ60x2.0	2.224.SOC.ACC	2.224.SOC.ADC
Stainless steel (304)	Φ50x1.5	2.224.NHC.BCC	2.224.NHC.BDC
	Φ60x2.0	2.224.NOC.BCC	2.224.NOC.BDC
Aluminium	Φ50x1.5	2.224.AHC.ACC	2.224.AHC.ADC
	Φ60x2.0	2.224.AOC.ACC	2.224.AOC.ADC
PVC	Φ50x2.5	2.224.P8C.BCC	2.224.P8C.BDC

Φ50、60 rollers can be fitted with PVC sleeve (2mm)
Φ50 rollers can be fitted with PU sleeve (2mm/3mm).
PVC/PU sleeve is not anti-static.





2411



2421

2411/2421 Series

Steel Single/Double Sprocket Roller

Product Features

- Welding the steel sprocket to the steel tube gives it the capacity to transmit high torque and meet the requirements for heavy duty transportation.
- The bearing end cap consists of a precision ball bearing, a polymer housing and end cap seal. Combined they provide an attractive, smooth and quite running roller.
- The design of the end cap protects the bearings by providing excellent resistance to dust and splashed water.
- Temperature range: −5℃ ~ +40℃.
  Please contact us if humidity out of this scope.

Specifications

Bearing Unit	
Bearing housing	Polyamide, black
End cap	Polyproylene, Damon green
Precision ball bearing	6002/6205

Drive Element	
Sprocket	Steel

2411/2421 Series Load Capacity

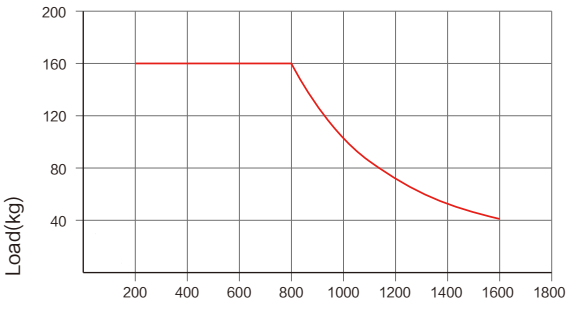

Steel tube Φ50x1.5，shaft Φ12/15，internal thread

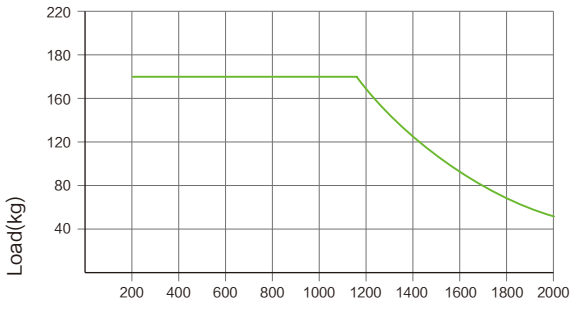

Steel tube Φ60x2.0，shaft Φ12/15，internal thread

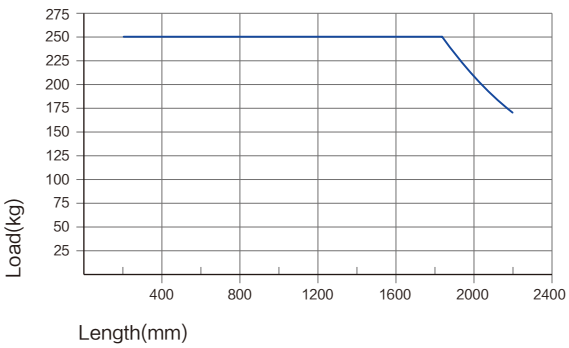

Steel tube Φ80x3.0，shaft Φ20，internal thread

Steel tube Φ76x3.0，shaft Φ20，internal thread

⚠ Above data shows the static load capacity of the roller for a uniformly distributed load.
You should also consider the chain tension, motor power drive factors, calculation based on the smallest value.



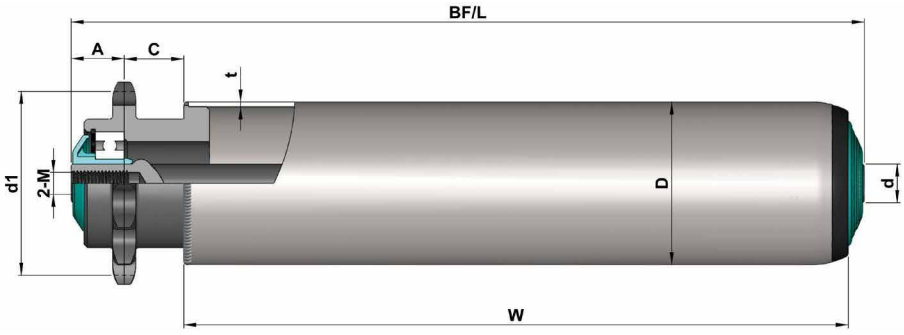

2411 Series Internal Thread

Tube Dia.(D)	Shaft Dia.(d)		Spocket style	A	C	d1
Φ50	Φ12/15	BF/L=W+41	08B14T	17	18.5	Φ57.07
Φ60	Φ12/15	BF/L=W+41	08B14T	17	18.5	Φ57.07
Φ76	Φ20	BF/L=W+37	10B15T	18	13	Φ76.35
Φ80	Φ20	BF/L=W+37	10B15T	18	13	Φ76.35

Tube	D*T	Shaft Dia.(d)		
		Φ12 (M8x15)	Φ15 (M10x20)	Φ20 (M12x25)
Steel, zinc plated	Φ50x1.5	2.411.SHC.ACC	2.411.SHC.ADC	
	Φ50x2.0	2.411.SWC.ACC	2.411.SWC.ADC	
	Φ60x2.0	2.411.SOC.ACC	2.411.SOC.ADC	
	Φ76x3.0			2.411.JSA.AEC
	Φ80x3.0			2.411.J6A.AEC
Steel, zinc plated with steel flange	Φ76x3.0			2.411.JSG.AEC
	Φ80x3.0			2.411.J6G.AEC
Stainless steel (304)	Φ50x1.5	2.411.NHC.BCC	2.411.NHC.BDC	
	Φ60x2.0	2.411.NOC.BCC	2.411.NOC.BDC	
	Φ76x3.0			2.411.NSC.BEC
Stainless steel, with stainless steel flange(304)	Φ60x2.0	2.411.NOG.BCC	2.411.NOG.BDC	
	Φ76x3.0			2.411.NSG.BEC

Φ50、60 rollers can be fitted with PVC sleeve (2mm)
Φ50 rollers can be fitted with PU sleeve (2mm/3mm).
PVC/PU sleeve is not anti-static.
If steel pallets are transported, the risk of wear on roller surface is higher, please contact us in advance.

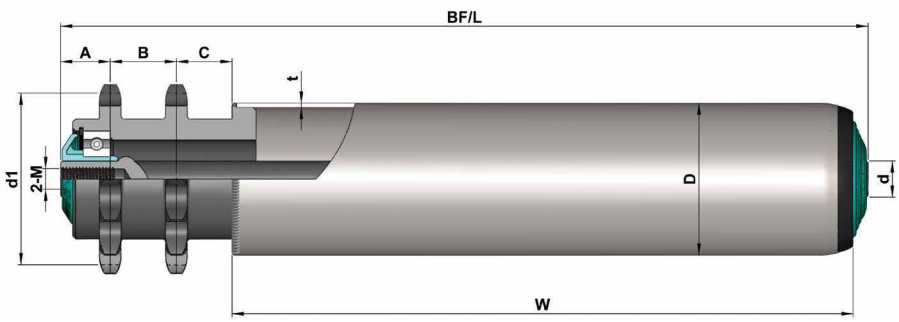

2421 Series Internal Thread

Tube Dia.(D)	Shaft Dia.(d)		Spocket style	A	B	C	d1
Φ50	Φ12/15	BF/L=W+63	08B14T	17	22	18.5	Φ57.07
Φ60	Φ12/15	BF/L=W+63	08B14T	17	22	18.5	Φ57.07
Φ76	Φ20	BF/L=W+63	10B15T	18	26	13	Φ76.35
Φ80	Φ20	BF/L=W+63	10B15T	18	26	13	Φ76.35

Tube	D*T	Shaft Dia.(d)		
		Φ12 (M8x15)	Φ15 (M10x20)	Φ20 (M12x25)
Steel, zinc plated	Φ50x1.5	2.421.SHC.ACC	2.421.SHC.ADC	
	Φ50x2.0	2.421.SWC.ACC	2.421.SWC.ADC	
	Φ60x2.0	2.421.SOC.ACC	2.421.SOC.ADC	
	Φ76x3.0			2.421.JSA.AEC
	Φ80x3.0			2.421.J6A.AEC
Steel, zinc plated with steel flange	Φ76x3.0			2.421.JSG.AEC
	Φ80x3.0			2.421.J6G.AEC
Stainless steel (304)	Φ50x1.5	2.421.NHC.BCC	2.421.NHC.BDC	
	Φ60x2.0	2.421.NOC.BCC	2.421.NOC.BDC	
	Φ76x3.0			2.421.NSC.BEC
Stainless steel, with stainless steel flange(304)	Φ60x2.0	2.421.NOG.BCC	2.421.NOG.BDC	
	Φ76x3.0			2.421.NSG.BEC

Φ50、60 rollers can be fitted with PVC sleeve (2mm)
Φ50 rollers can be fitted with PU sleeve (2mm/3mm).
PVC/PU sleeve is not anti-static.
If steel pallets are transported, the risk of wear on roller surface is higher, please contact us in advance.





2311



2321

2311/2321 Series

Steel Single/Double Sprocket Roller

Product Features

- Welding the steel sprocket to the steel tube gives it the capacity to transmit high torque and meet the requirements for heavy duty transportation.
- The precision ball bearing is pressed tightly into the steel bearing housing for maximum durability.
- The environmental working conditions are broad. They can be used in both high and low temperature applications.
- Anti-static design.
- The covering on the outside of the sprocket protects the bearings by providing excellent resistance to dust and splashed water.
- Temperature range: -5℃ ~ +40℃,Remove the end cap (green) and retaining ring (black), the temperature can reach -30℃ ~ +80℃.

Paraments

Bearing Unit	
Bearing house	Steel, zinc plated
Precision ball bearing	6001/6202/6204
Ground sleeve	Polyamide ,black

Driving element	
Sprocket	Steel

2311/2321 Series Load Capacity

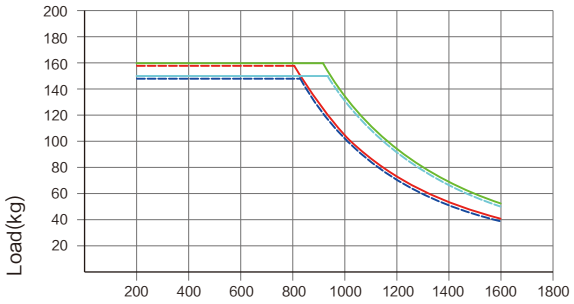

- Steel tube Φ50x2.0, shaft Φ15, internal thread
- Steel tube Φ50x1.5, shaft Φ15, internal thread
- Steel tube Φ50x2.0, shaft Φ12, internal thread
- Steel tube Φ50x1.5, shaft Φ12, internal thread

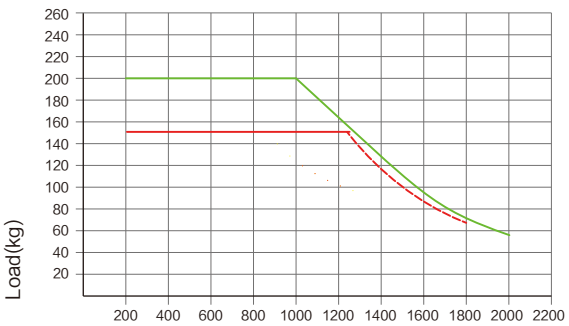

- Steel tube Φ60x2.0, shaft Φ15, internal thread
- Steel tube Φ60x2.0, shaft Φ12, internal thread

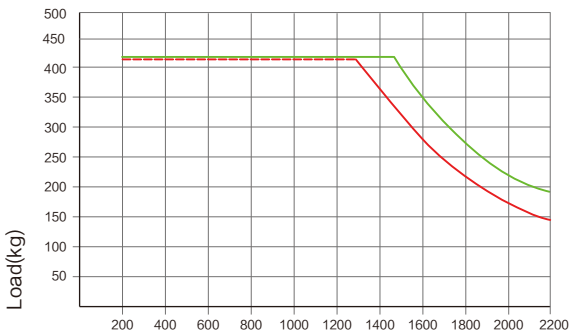

- Steel tube Φ76x4.0, shaft Φ20, internal thread
- Steel tube Φ76x3.0, shaft Φ20, internal thread

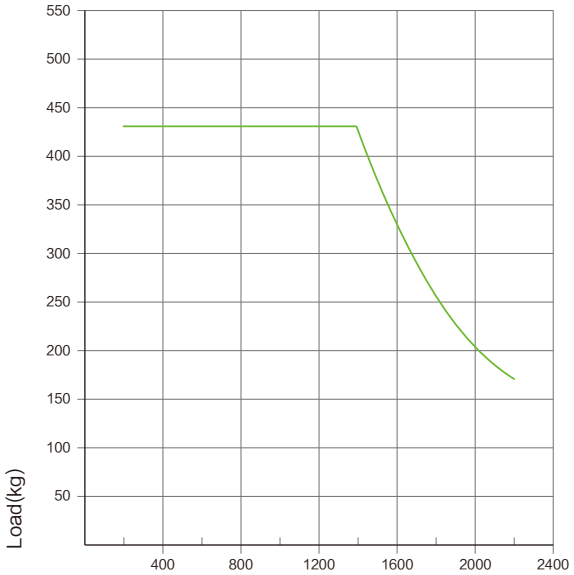

- Steel tube Φ80x3.0, shaft Φ20, internal thread

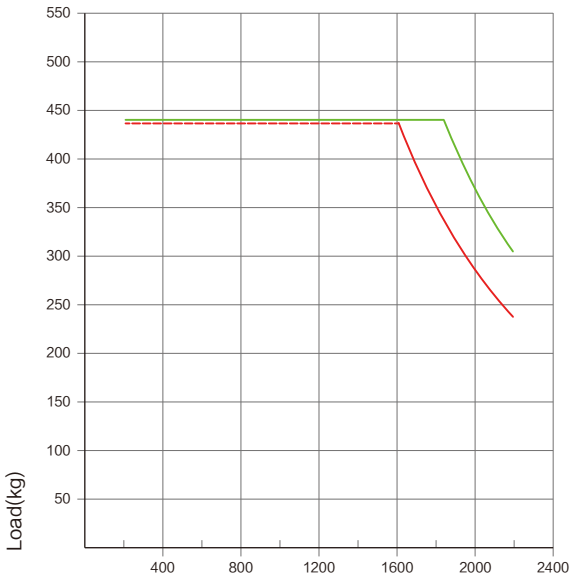

- Steel tube Φ89x4.0, shaft Φ20, internal thread
- Steel tube Φ89x3.0, shaft Φ20, internal thread

⚠ Above data shows the static load capacity of the roller for a uniformly distributed load.
You should also consider the chain tension, motor power drive factors, calculation based on the smallest value.

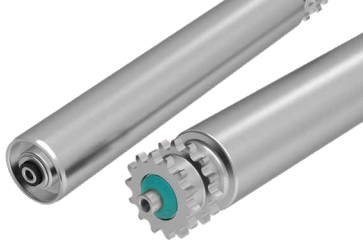

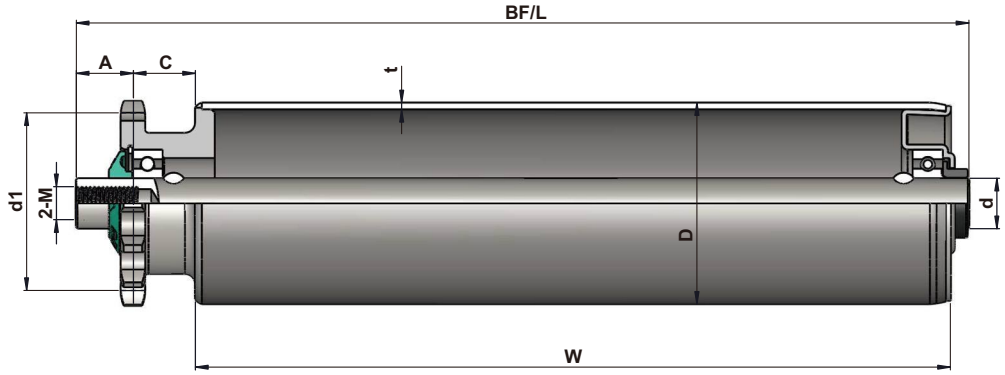

2311 Series Internal Thread

Tube Dia.(D)	Shaft Dia.(d)		Spocket style	A	C	d1
Φ50	Φ12	BF/L=W+40	08B11T	17	18.5	Φ45.08
Φ50	Φ15	BF/L=W+41	08B14T	17	18.5	Φ57.07
Φ60	Φ12/15	BF/L=W+41	08B14T	17	18.5	Φ57.07
Φ76	Φ15	BF/L=W+41	08B14T	17	18.5	Φ57.07
Φ76	Φ20	BF/L=W+44	10A13T	20	18.5	Φ66.33
Φ80	Φ20	BF/L=W+44	10B15T	20	18.5	Φ76.35
Φ89	Φ20	BF/L=W+44	10B15T	20	18.5	Φ76.35

Tube	D*T	Shaft Dia.(d)		
		Φ12 (M8x15)	Φ15 (M10x20)	Φ20 (M12x25)
Steel, zinc plated	Φ50x1.5	2.311.SHC.ACC	2.311.SHC.ADC	
	Φ50x2.0	2.311.SWC.ACC	2.311.SWC.ADC	
	Φ60x2.0	2.311.SOC.ACC	2.311.SOC.ADC	
	Φ60x3.0		2.311.JLA.ADC	
	Φ76x3.0		2.311.JSA.ADC	2.311.JSA.AEC
	Φ76x4.0			2.311.JRB.AEC
	Φ80x3.0			2.311.J6A.AEC
	Φ89x3.0			2.311.JYA.AEC
	Φ89x4.0			2.311.JUB.AEC
Steel, zinc plated with steel flange	Φ60x3.0		2.311.JLG.ADC	
	Φ76x3.0			2.311.JSG.AEC
	Φ76x4.0			2.311.JRG.AEC
	Φ80x3.0			2.311.J6G.AEC
	Φ89x3.0			2.311.JYG.AEC
	Φ89x4.0			2.311.JUG.AEC
High-strength steel，Zinc-plated	Φ80x2.0			○
High-strength steel，Zinc-plated，with steel flange	Φ80x2.0			○
Stainless steel (304)	Φ50x1.5	2.311.NHC.BCC	2.311.NHC.BDC	
	Φ60x2.0	2.311.NOC.BCC	2.311.NOC.BDC	
	Φ76x3.0		2.311.NSC.BDC	2.311.NSC.BEC
Stainless steel, with stainless steel flange(304)	Φ60x2.0	2.311.NOG.BCC	2.311.NOG.BDC	
	Φ76x3.0		2.311.NSG.BDC	2.311.NSG.BEC

Φ50、60 rollers can be fitted with PVC sleeve (2mm)
Φ50 rollers can be fitted with PU sleeve (2mm/3mm).
PVC/PU sleeve is not anti-static.
If steel pallets are transported, the risk of wear on roller surface is higher, please contact us in advance.

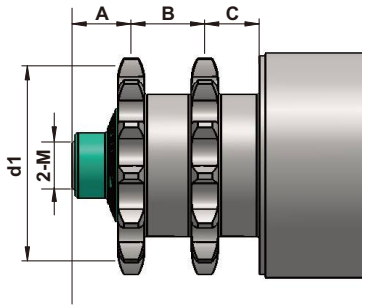

High-strength steel roller

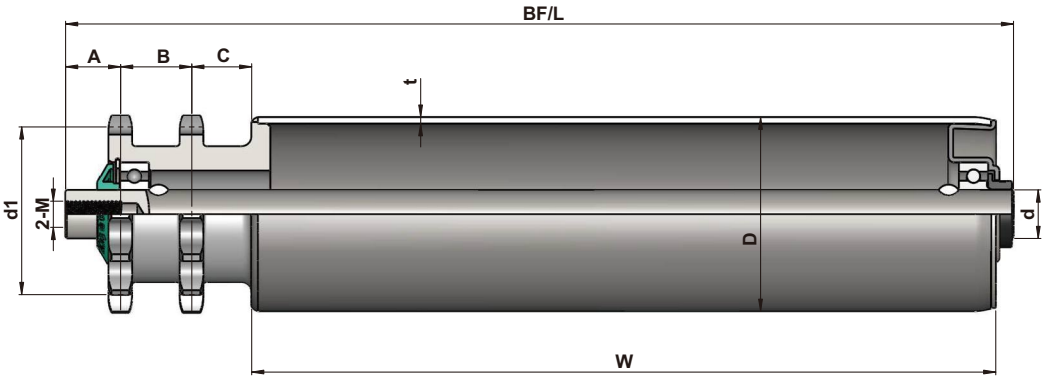

2321 Series Internal Thread

Tube Dia.(D)	Shaft Dia.(d)		Spocket style	A	B	C	d1
Φ50	Φ12	BF/L=W+62	08B11T	17	22	18.5	Φ45.08
Φ50	Φ15	BF/L=W+63	08B14T	17	22	18.5	Φ57.07
Φ60	Φ12/15	BF/L=W+63	08B14T	17	22	18.5	Φ57.07
Φ76	Φ15	BF/L=W+63	08B14T	17	22	18.5	Φ57.07
Φ76	Φ17/20	BF/L=W+69	10A13T	20	25	18.5	Φ66.33
Φ80	Φ20	BF/L=W+69	10B15T	20	25	18.5	Φ76.35
Φ89	Φ20	BF/L=W+69	10B15T	20	25	18.5	Φ76.35

Tube	D*T	Shaft Dia.(d)			
		Φ12 (M8x15)	Φ15 (M10x20)	Φ17 (M12x25)	Φ20 (M12x25)
Steel, zinc plated	Φ50x1.5	2.321.SHC.ACC	2.321.SHC.ADC		
	Φ50x2.0	2.321.SWC.ACC	2.321.SWC.ADC		
	Φ60x2.0	2.321.SOC.ACC	2.321.SOC.ADC		
	Φ60x3.0		2.321.JLA.ADC		
	Φ76x3.0		2.321.JSA.ADC		2.321.JSA.AEC
	Φ76x4.0				2.321.JRB.AEC
	Φ80x3.0				2.321.J6A.AEC
	Φ89x3.0				2.321.JYA.AEC
	Φ89x4.0				2.321.JUB.AEC
Steel, zinc plated with steel flange	Φ60x3.0		2.321.JLG.ADC		
	Φ76x3.0				2.321.JSG.AEC
	Φ76x4.0				2.321.JRG.AEC
	Φ80x3.0				2.321.J6G.AEC
	Φ89x3.0				2.321.JYG.AEC
	Φ89x4.0				2.321.JUG.AEC
High-strength steel，Zinc-plated	Φ76x2.0			2.321.GXA.APC	
	Φ80x2.0				○
High-strength steel，Zinc-plated with steel flange	Φ76x2.0			2.321.GXG.APC	
	Φ80x2.0				○
High-strength steel, Zinc-platedwith Steel Flange	Φ50x1.5	2.321.NHC.BCC	2.321.NHC.BDC		
	Φ60x2.0	2.321.NOC.BCC	2.321.NOC.BDC		
	Φ76x3.0		2.321.NSC.BDC		2.321.NSC.BEC
Stainless steel, with stainless steel flange(304)	Φ60x2.0	2.321.NOG.BCC	2.321.NOG.BDC		
	Φ76x3.0		2.321.NSG.BDC		2.321.NSG.BEC

Φ50、60 rollers can be fitted with PVC sleeve (2mm)
Φ50 rollers can be fitted with PU sleeve (2mm/3mm).
PVC/PU sleeve is not anti-static.
If steel pallets are transported, the risk of wear on roller surface is higher, please contact us in advance.

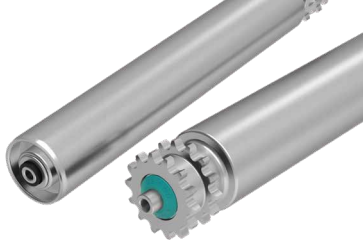

Steel Flange

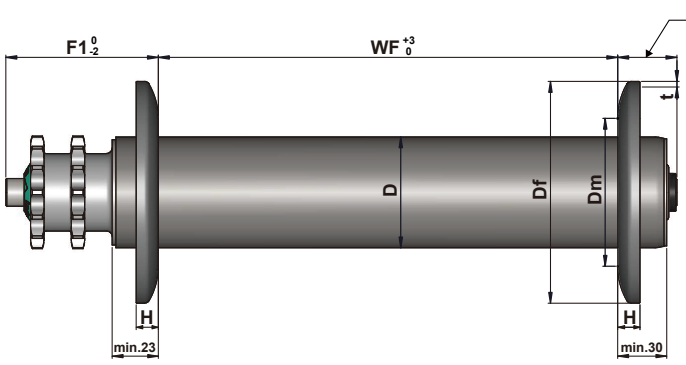

F2 subject to the cumulative error of F1 and WF

Unit：mm

D	Df	Dm	H	t
Φ60	Φ120	Φ80	12	3
Φ76	Φ135	Φ88.5	16.5	4
Φ80	Φ150	Φ110	18	4
Φ89	Φ150	Φ110	18	4

1.Steel flange and tube are welded together making it strong and durable.

2.Steel tube only.

Stainless steel Flange(304)

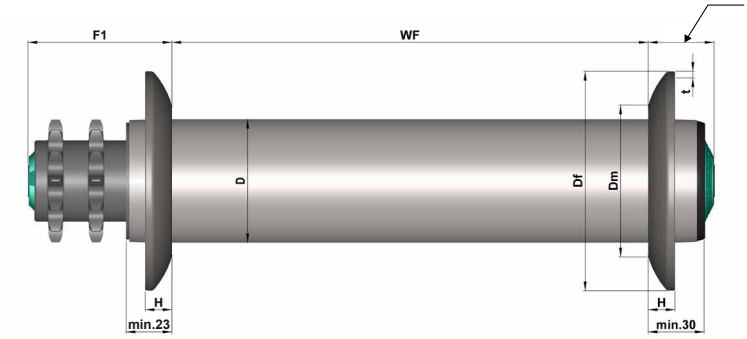

F2 subject to the cumulative error of F1 and WF

Unit：mm

D	Df	Dm	H	t
Φ60	Φ120	Φ80	12	3
Φ76	Φ135	Φ88.5	16.5	3

1.Stainless Steel flange and tube are welded together making it strong and durable.

2.Stainless Steel tube only.

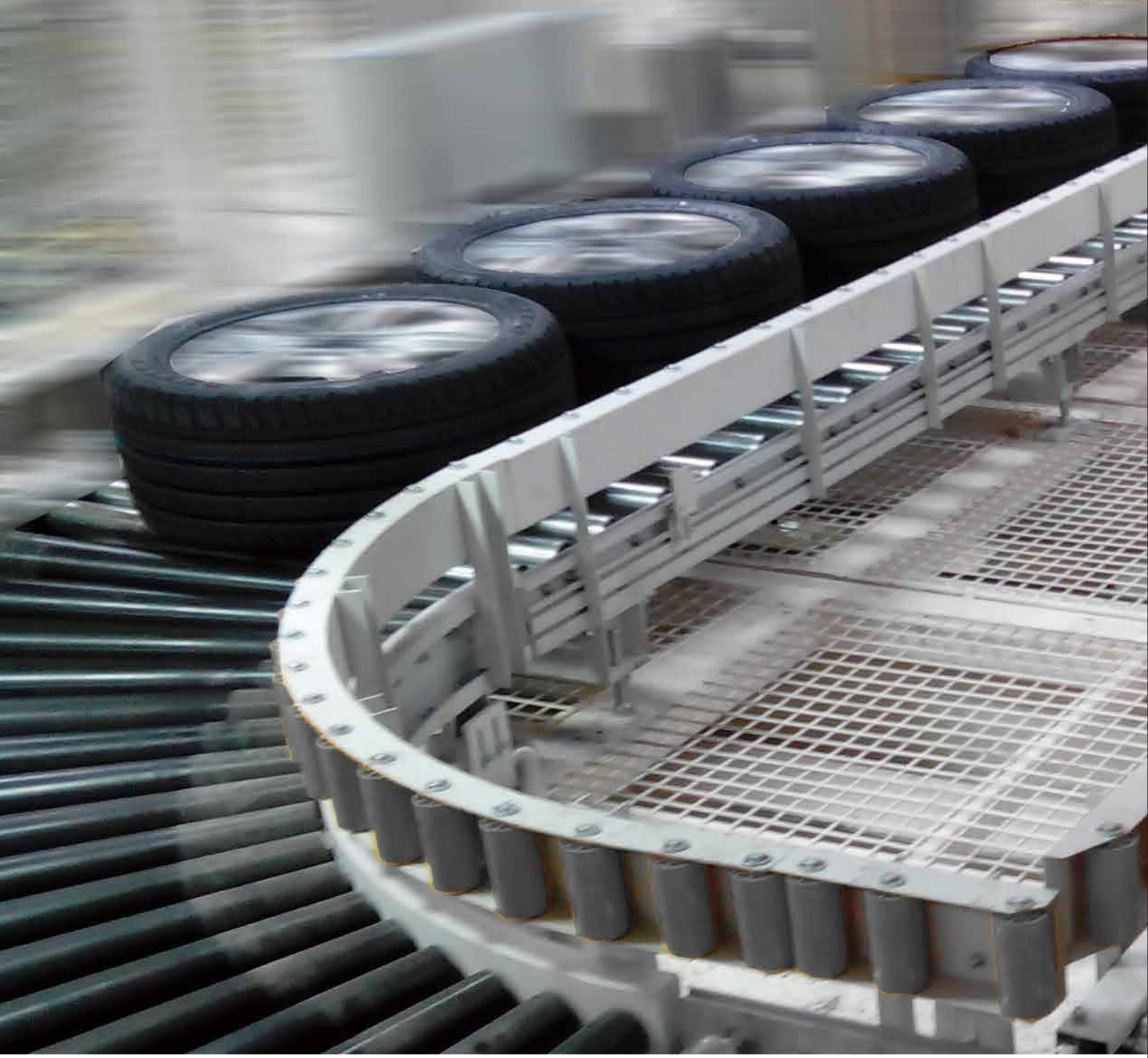

ACCUMULATION CONVEYING

Accumulation conveyors not only achieve the function of common drive conveyors but also allows goods to stop and accumulate on the conveyor line without stopping the conveyor drive and without any obvious increase to the driving resistance.

In normal conveying the accumulation device transmits the driving force. When goods stop and accumulate, the operating moment of resistance exceeds the definitive driving force. The accumulation friction sleeve slips allowing the goods to stop the roller whilst the conveyor drive is still running. The accumulation force is determined by many factors. These factors have a large influence on the roller's operation and lifespan.

1.Product weight;
2.Friction factor between product and roller surface;
3.Temperature and humidity of environment;
4.Accumulation time;
5.Load position.



Rollers are listed according to their series and available features.

Product features	Series	Diameter	Driving Element	Page
Polymer sprocket, polyamide bearing housing, low running noise.	***3214/3224***	Φ50/60	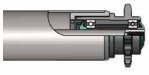	**70-71**
Steel sprocket, polyamide bearing housing, attractive, durable.	***3211/3221***	Φ50/60	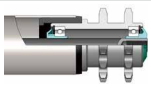	**72-73**
Steel sprocket, steel bearing housing, accumulation force is adjustable, suitable for medium duty accumulation.	***3816/3826***	Φ50/60/76		**74-77**



3214



3224

3214/3224 Series

Polymer Single/Double Sprocket Accumulating Roller

Product Features

- With typical friction driven accumulation, the accumulation force is associated to duty capacity.
- The bearing end cap consists of a precision ball bearing, a polymer housing and end cap seal. Combined they provide an attractive, smooth and quite running roller.
- The design of the end cap protects the bearings by providing excellent resistance to dust and splashed water.
- Compared with steel sprockets, selecting the polyamide sprocket roller as the drive element greatly reduces the running noise.
- Standard configuration with anti-static design surface impedance $\leqslant 10^{6}\,\Omega$。
- Temperature range: -5℃~ +40℃.
- Humidity range: 30%~ 90% RH (non-condensation). Please contact us if humidity out of this scope.

Specifications

Bearing Unit	
Bearing housing	Polyamide, black
End cap	Polypropylene, Damon green
Precision ball bearing	6002

Drive Element	
Sprocket	Polyamide, black



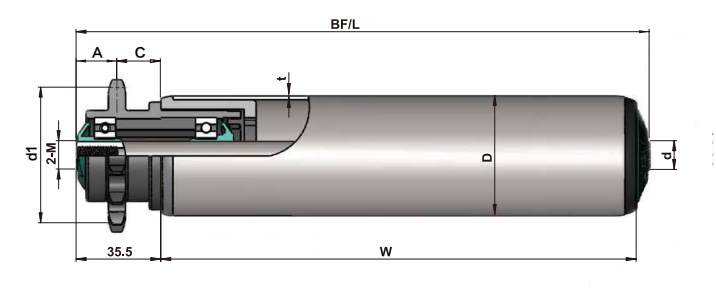

3214 Series Internal Thread

Tube Dia.(D)	Shaft Dia.(d)		Sprocket Type	A	C	d1
Φ50	Φ12/15	BF/L=W+41	08B14T	17	18.5	57.07
Φ60	Φ12/15	BF/L=W+41	08B14T	17	18.5	57.07

Tube	D*T	Shaft Dia.(d)	
		Φ12 (M8x15)	Φ15 (M10x20)
Steel, zinc plated	Φ50x1.5	3.214.SHC.ACC	3.214.SHC.ADC
	Φ60x2.0	3.214.SOC.ACC	3.214.SOC.ADC
Stianless steel (304)	Φ50x1.5	3.214.NHC.BCC	3.214.NHC.BDC
	Φ60x2.0	3.214.NOC.BCC	3.214.NOC.BDC
PVC	Φ50x2.5	3.214.P8C.BCC	3.214.P8C.BDC

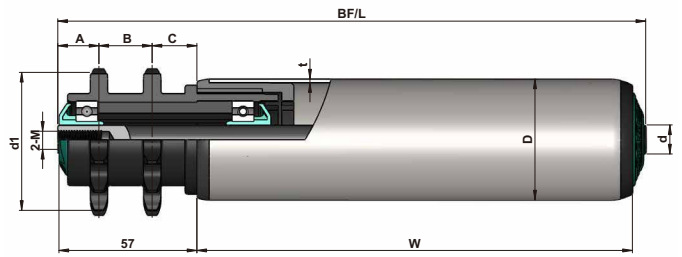

3224 Series Internal Thread

Tube Dia.(D)	Shaft Dia.(d)		Sprocket Type	A	B	C	d1
Φ50	Φ12/15	BF/L=W+63	08B14T	17	22	18.5	57.07
Φ60	Φ12/15	BF/L=W+63	08B14T	17	22	18.5	57.07

Tube	D*T	Shaft Dia.(d)	
		Φ12 (M8x15)	Φ15 (M10x20)
Steel, zinc plated	Φ50x1.5	3.224.SHC.ACC	3.224.SHC.ADC
	Φ60x2.0	3.224.SOC.ACC	3.224.SOC.ADC
Stianless steel (304)	Φ50x1.5	3.224.NHC.BCC	3.224.NHC.BDC
	Φ60x2.0	3.224.NOC.BCC	3.224.NOC.BDC
PVC	Φ50x2.5	3.224.P8C.BCC	3.224.P8C.BDC

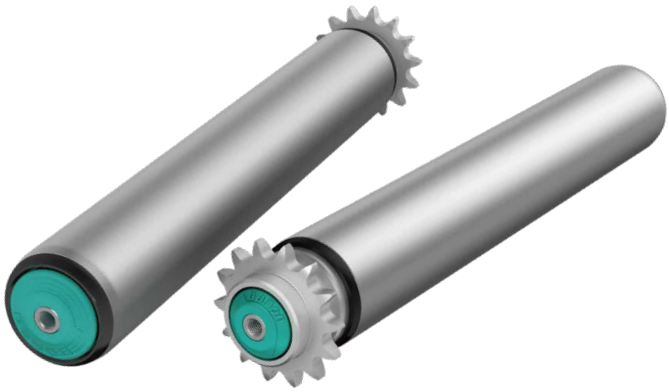

3211

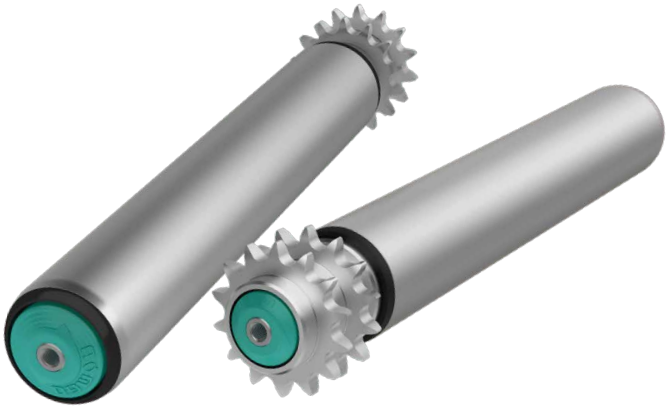

3221

3211/3221 Series

Steel Single/Double Sprocket Accumulating Roller

Product Features

- With typical friction driven accumulation, the accumulation force is associated to duty capacity.
- The bearing end cap consists of a precision ball bearing, a polymer housing and end cap seal. Combined they provide an attractive, smooth and quite running roller.
- The design of the end cap protects the bearings by providing excellent resistance to dust and splashed water.
- Utilizes durable, steel sprockets.
- Standard configuration with anti-static design surface impedance $\leqslant 10^6\ \Omega$。
- Temperature range: -5℃ ~ +40 ℃.
- Humidity range: 30%~ 90% RH (non-condensation).
  Please contact us if humidity out of this scope.

Specifications

Bearing Unit	
Bearing housing	Polyamide, black
End cap	Polypropylene, Damon green
Precision ball bearing	6002

Drive Element	
Sprocket	Steel



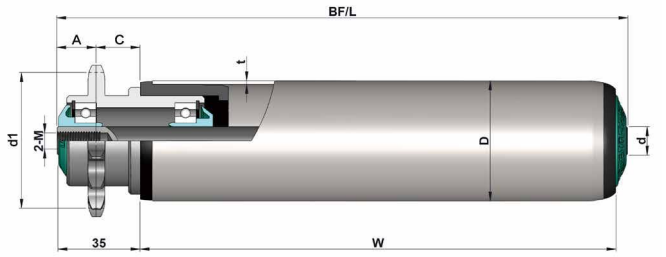

3211 Series Internal Thread

Tube Dia.(D)	Shaft Dia.(d)		Sprocket Type	A	C	d1
Φ50	Φ12/15	BF/L=W+41	08B14T	17	18.5	57.07
Φ60	Φ12/15	BF/L=W+41	08B14T	17	18.5	57.07

Tube	D*T	Shaft Dia.(d)	
		Φ12 (M8x15)	Φ15 (M10x20)
Steel, zinc plated	Φ50x1.5	3.211.SHC.ACC	3.211.SHC.ADC
	Φ60x2.0	3.211.SOC.ACC	3.211.SOC.ADC
Stianless steel (304)	Φ50x1.5	3.211.NHC.BCC	3.211.NHC.BDC
	Φ60x2.0	3.211.NOC.BCC	3.211.NOC.BDC

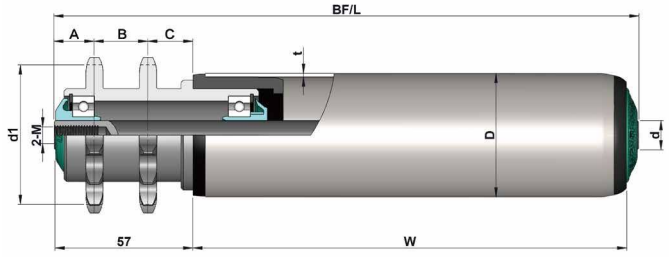

3221 Series Internal Thread

Tube Dia.(D)	Shaft Dia.(d)		Sprocket Type	A	B	C	d1
Φ50	Φ12/15	BF/L=W+63	08B14T	17	22	18.5	57.07
Φ60	Φ12/15	BF/L=W+63	08B14T	17	22	18.5	57.07

Tube	D*T	Shaft Dia.(d)	
		Φ12 (M8x15)	Φ15 (M10x20)
Steel, zinc plated	Φ50x1.5	3.221.SHC.ACC	3.221.SHC.ADC
	Φ60x2.0	3.221.SOC.ACC	3.221.SOC.ADC
Stianless steel (304)	Φ50x1.5	3.221.NHC.BCC	3.221.NHC.BDC
	Φ60x2.0	3.221.NOC.BCC	3.221.NOC.BDC

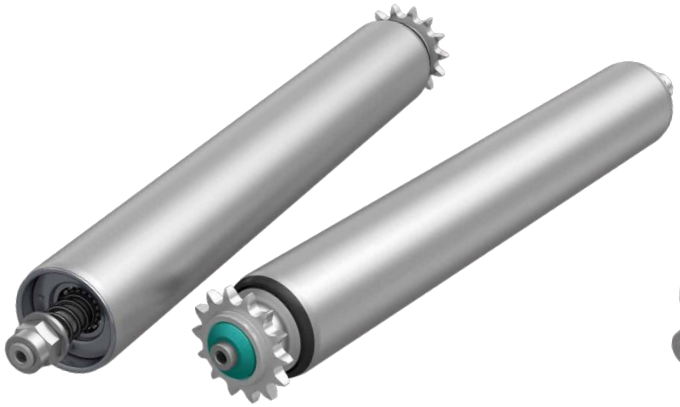

3816

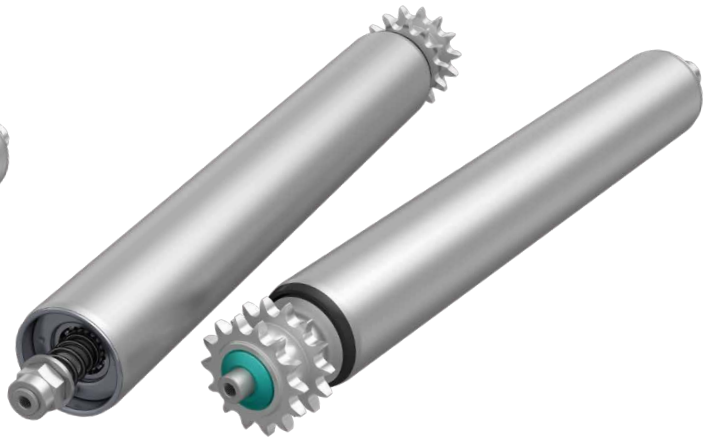

3826

3816/3826 Series

Steel Single/Double Adjustable Accumulating Roller

Product Features

- The accumulation force can be adjusted with high flexibility by the nut at the end of the roller.
- The precision ball bearing is pressed tightly into the steel bearing housing for maximum durability.
- The friction housing is made of special material which greatly improves its abrasion resistance and lifespan.
- Temperature range: −5℃ ~ +40℃.
- Humidity range: 30%~ 90% RH (non−condensation).
  Please contact us if humidity out of this scope.

Specifications

Bearing Unit	
Bearing housing	Polyamide/zinc plated
Precision ball bearing	6001/6002/6204

Drive Element	
Sprocket	Steel



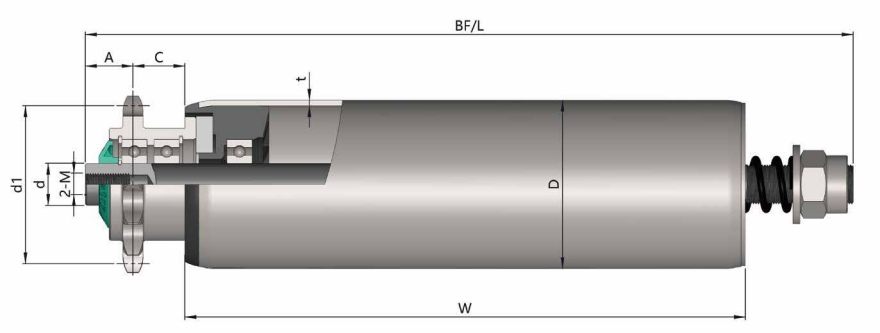

3816 Series Internal Thread

Tube Dia.(D)	Shaft Dia.(d)		Sprocket Type	A	C	d1
Φ50	Φ12	BF/L=W+70	08B11T	17	18.5	Φ45.08
Φ60	Φ15	BF/L=W+70	08B14T	17	18.5	Φ57.07
Φ76	Φ20	BF/L=W+78	10A13T	20	18.5	Φ66.33

Tube	D*T	Shaft Dia.(d)		
		Φ12 (M8x15)	Φ15 (M8x15)	Φ20 (M12x25)
Steel, zinc plated	Φ50x1.5	3.816.SHC.ACC		
	Φ60x2.0		3.816.SOC.ADC	
	Φ76x3.0			3.816.JSA.AEC
Stianless steel (304)	Φ50x1.5	3.816.NHC.BCC		
	Φ60x2.0		3.816.NOC.BDC	
	Φ76x3.0			3.816.NSC.BEC

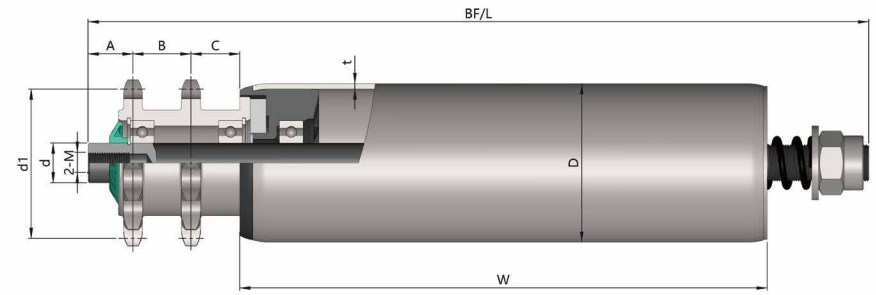

3826 Series Internal Thread

Tube Dia.(D)	Shaft Dia.(d)		Sprocket Type	A	B	C	d1
Φ50	Φ12	BF/L=W+92	08B11T	17	22	18.5	Φ45.08
Φ60	Φ15	BF/L=W+92	08B14T	17	22	18.5	Φ57.07
Φ76	Φ20	BF/L=W+103	10A13T	20	25	18.5	Φ66.33

Tube	D*T	Shaft Dia.(d)		
		Φ12 (M8x15)	Φ15 (M8x15)	Φ20 (M12x25)
Steel, zinc plated	Φ50x1.5	3.826.SHC.ACC		
	Φ60x2.0		3.826.SOC.ADC	
	Φ76x3.0			3.826.JSA.AEC
Stianless steel (304)	Φ50x1.5	3.826.NHC.BCC		
	Φ60x2.0		3.826.NOC.BDC	
	Φ76x3.0			3.826.NSC.BEC

Duty Capacity Table of Accumulating Roller

3214/3224 Series Polymer Single/Double Sprocket Accumulating Roller

⚠ Duty capacity/ pc (No resistance from guardrail)

Roller material / Conveying goods material	Steel tube	Rubber lagging
paper	3~20kg	2~15kg
plastic	5~25kg	2~20kg

3211/3221 Series Steel Single/Double Sprocket Accumulating Roller

⚠ Duty capacity/ pc (No resistance from guardrail)

Roller material / Conveying goods material	Steel tube	Rubber lagging
paper	3~15kg	2~15kg
plastic	5~20kg	

3816/3826 Series Steel Single/Double Adjustable Accumulating Roller

⚠ Duty capacity/ pc (No resistance from guardrail)

Roller material / Conveying goods material	Φ50x1.5	Φ60x2.0	Φ76x3.0
plastic	0~55kg	0~70kg	0~120kg
wood			
paper	0~40kg		

Please contact us if out of above range.

Note: All duty capacity mentioned is in the status of free of guardrail resistance or roller guardrail.

⚠ Please pay attention to the effective driving force when using the accumulating roller.
It is suggested to adopt the roller guardrail to minimize the frictional resistance between the conveyed object and the guardrail.
In case of special conveyed objects or absence of experience in using it, please test the prototype first.





CURVE CONVEYING

The different diameters over the length the tapered roller i.e. small one end and large the other end, provides a linear velocity to ensure smooth conveying of goods around the curve.

The roller axis is installed at a defined angle θ/2 (θ=3.6°).

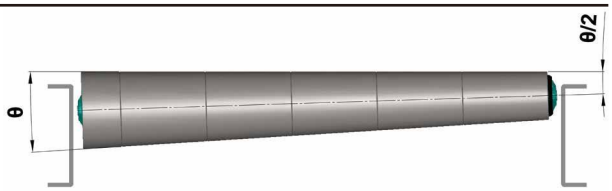

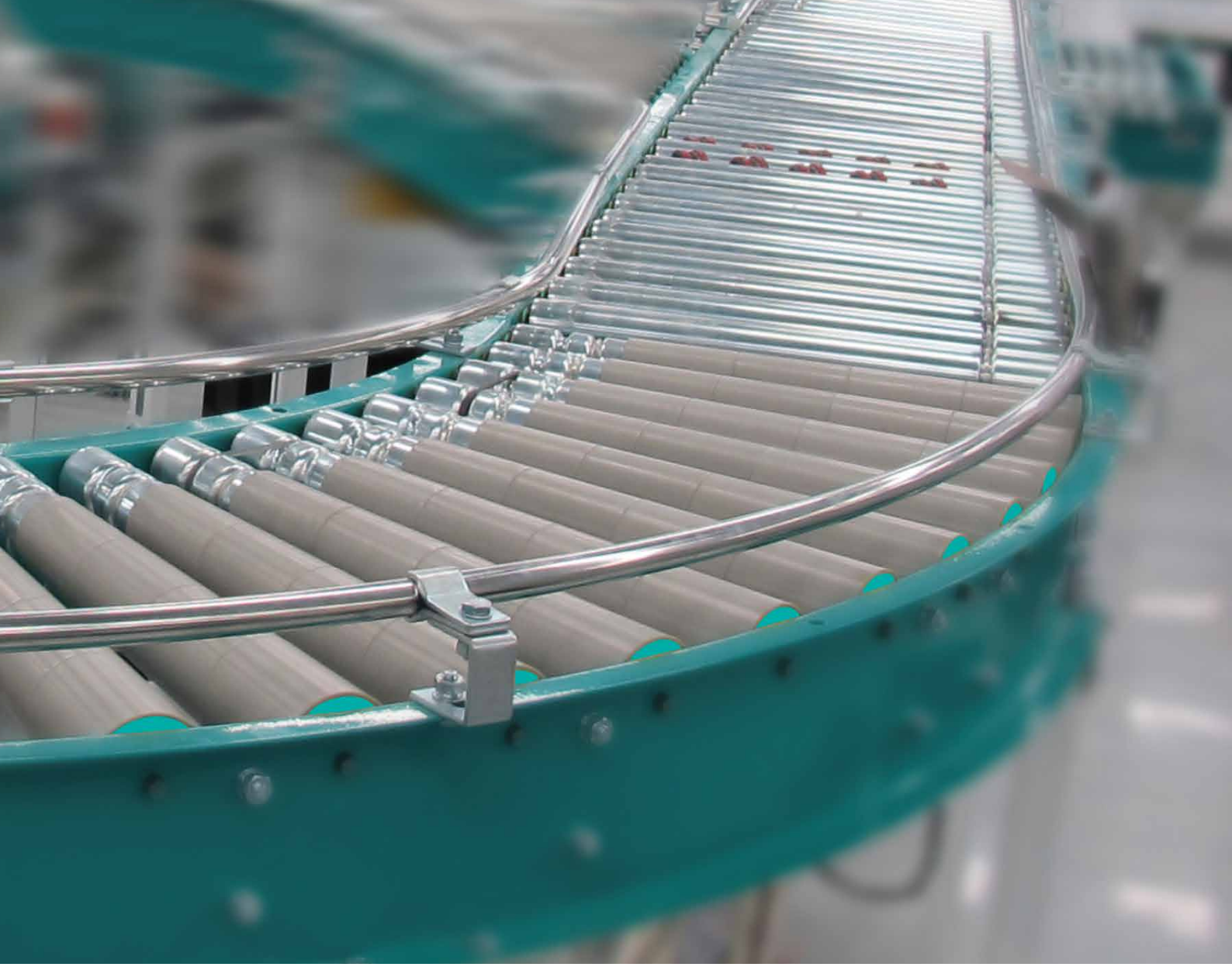

Rollers are listed according to their series and available features.

Product features	Series	Small head diameter	Driving element	Page
Tapered sleeve, attractive, low noise.	***1600***	Φ52.5/55.6		**80-83**
Tapered sleeve, O-Belt drive, light duty conveying, groove position customized.	***2640***	Φ52.5/55.6		**84-86**
Tapered sleeve, O-belt drive, light duty conveying, smooth running.	***2660***	Φ52.5/55.6		**87-89**
Tapered sleeve, poly-vee drive, Medium duty conveying, high speed, low noise.	***2650***	Φ52.5/55.6		**90-92**
Tapered sleeve, polymer sprocket, medium duty conveying, attractive, low noise.	***2624***	Φ52.5/55.6	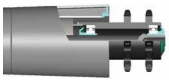	**93-94**
All-steel tapered tube,sturdy and durable.	***1500***	Φ50		**95-96**
Steel sprocket welded steel conical cylinder, suitable for medium load conveying,sturdy and durable.	***2521***	Φ50		**97-99**

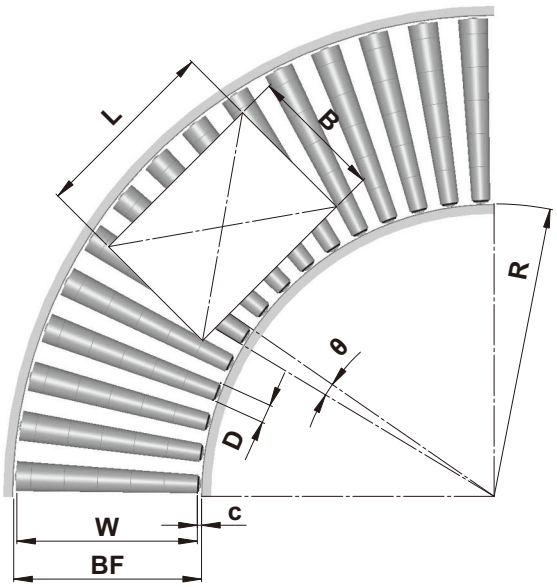

Turn Radius

In theory, the geometric extension line of the tapered roller should join with the centre of the radius of the curve frame. By using this method, you can achieve the ideal curve for conveying. It may be calculated using the formula below:

$$R=\frac{D}{K}-c$$

In the formula :

R —— turn (inner) radius
D —— diameter of the smaller head of the taper roller
K —— conical degree (the conical degree is expressed by fraction, eg. 1/16, 1/30, it's reduction formula is K=2*tan θ /2
c —— the space between the tapered roller's smaller head and the inner side of the frame.

Series	Taper	Small dia.(D)	Curve radius(R)
1600	3.6°	52.5	830
2624		55.6	880
2650	3.6°	52.5	800
2660		55.6	850
2640	3.6°	52.5	760
		55.6	810
1500 2521	3.6°	50	790

Roller Pitch

The design of roller pitch should follow the principle of "minimum 3 rollers to support the goods at any moment" (refer to P03)

For poly-vee tapered rollers the recommended pitch of poly-vee pulleys is 73.7mm.

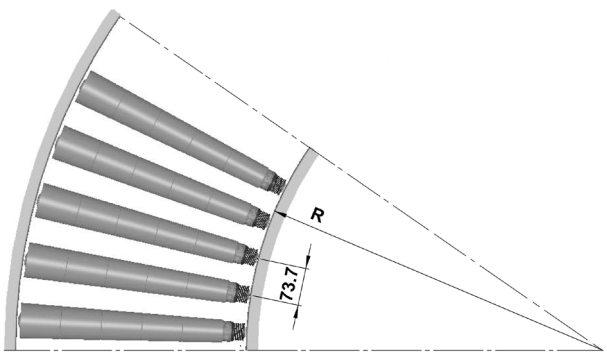

Calculating Roller Length

For straight conveying, generally there is no need to consider the length of the goods but for curved conveying, the length and width of goods and the curve radius are all influencing factors. It may be calculated using the formula below:

$$BF=\sqrt{(R+B)^2+(L/2)^2}-R+(\text{min.}125)$$

In the formula:

BF—— frame inner width
R —— turn (inner) radius
B —— width of goods
L —— length of goods

After confirming BF, you can calculate the roller length W and taper sleeve length WT by the available series of tapered roller. The tapered sleeve is the working surface of the tapered roller. The tapered sleeve length WT is available in increments of 50mm. Adjust the calculation result based on the formula.

E.g.: W计=628, WT=595
W计=561, WT=545

⚠ Based on the width of goods, the calculated roller length for a curve is longer than that for a straight conveyor. Typically, the length of the roller for the curve would be used as the default roller length for the entire conveyor system. Where it is not convenient to utilize a uniform roller length, a transitional straight conveyor will need to be installed.





1600 Series

Gravity Tapered Sleeve Roller

Product Features

- Based on the 1200 Series, fitted with a grey polypropylene taper sleeve; abrasion resistant, low noise, shockproof.
- In the case of sensitive to static electricity, you can choose anti-static tapered sleeve (black), surface resistance value $\leqslant 10^6\Omega$.
- The bearing end cap consists of a precision ball bearing, a polymer housing and end cap seal. Combined they provide an attractive, smooth and quite running roller.
- The design of the end cap protects the bearings by providing excellent resistance to dust and splashed water.
- The roller is light, easy to start-up.
- The weight of single items to be conveyed should not exceed 50kg.
- Temperature range: -5℃ ~ 40℃.
- Humidity range: 30%~ 90% RH (non-condensation).
  Please contact us if humidity out of this scope.

Specifications

Bearing Unit	
Bearing housing	Polyamide, black
End cap	Polypropylene, Damon green
Precision ball bearing	6002

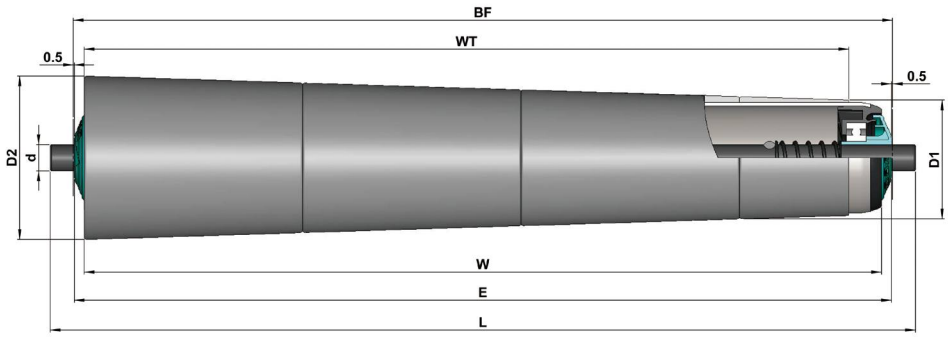

1600 Series Spring Loaded

Tube Dia. (D)	Shaft Dia.(d)			
Φ50	Φ12/11hex	BF=W+10	E=W+9	L=W+31

Tube	D*T	WT	D1	D2	Shaft Dia.(d)	
					11hex	Φ12
Steel, zinc plated, tapered sleeve	Φ50x1.5	245	Φ55.6	Φ71	1.600.SHJ.AFA	1.600.SHJ.ACA
		295	Φ52.5	Φ71		
		345	Φ55.6	Φ77.3		
		395	Φ52.5	Φ77.3		
		445	Φ55.6	Φ83.6		
		495	Φ52.5	Φ83.6		
		545	Φ55.6	Φ89.9		
		595	Φ52.5	Φ89.9		
Steel, zinc plated, tapered sleeve (Static conductive version,black)		645	Φ55.6	Φ96.2	1.600.SHK.AFA	1.600.SHK.ACA
		695	Φ52.5	Φ96.2		
		745	Φ55.6	Φ102.5		
		795	Φ52.5	Φ102.5		
		845	Φ55.6	Φ108.8		
		895	Φ52.5	Φ108.8		
		945	Φ55.6	Φ115		
		995	Φ52.5	Φ115		
		1045	Φ55.6	Φ121.3		
		1095	Φ52.5	Φ121.3		

The taper sleeve length dimension (WT) is not accurate.



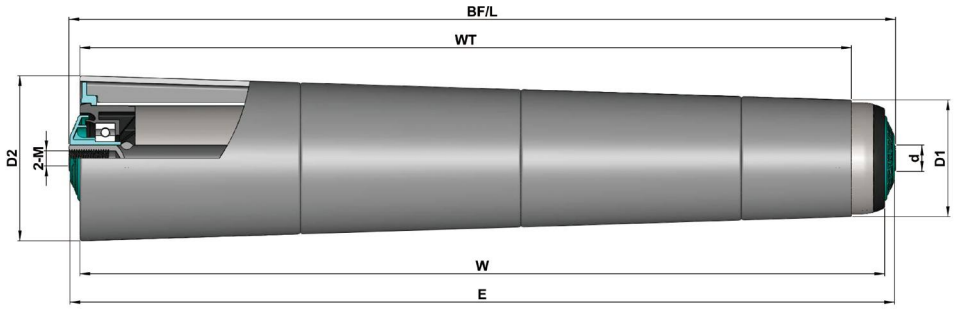

1600 Series Internal Thread

Tube Dia.(D)	Shaft Dia.(d)			
Φ50	Φ12/15	BF=W+10	E=W+9	L=W+10

Tube	D*T	WT	D1	D2	Shaft Dia.(d)	
					Φ12（M8x15)	Φ15（M18x20）
Steel, zinc plated, tapered sleeve	Φ50x1.5	245	Φ55.6	Φ71	1.600.SHJ.ACC	1.600.SHJ.ADC
		295	Φ52.5	Φ71		
		345	Φ55.6	Φ77.3		
		395	Φ52.5	Φ77.3		
		445	Φ55.6	Φ83.6		
		495	Φ52.5	Φ83.6		
		545	Φ55.6	Φ89.9		
		595	Φ52.5	Φ89.9		
Steel, zinc plated, tapered sleeve (Static conductive version,black)		645	Φ55.6	Φ96.2	1.600.SHK.ACC	1.600.SHK.ADC
		695	Φ52.5	Φ96.2		
		745	Φ55.6	Φ102.5		
		795	Φ52.5	Φ102.5		
		845	Φ55.6	Φ108.8		
		895	Φ52.5	Φ108.8		
		945	Φ55.6	Φ115		
		995	Φ52.5	Φ115		
		1045	Φ55.6	Φ121.3		
		1095	Φ52.5	Φ121.3		

The taper sleeve length dimension (WT) is not accurate.



2640 Series

Double Grooved Tapered Sleeve Roller

Product Features

- Based on the 2240 Series, cover ed with grey polypropylene taper sleeve; abrasion resistant, low noise, shockproof.
- In the case of sensitive to static electricity, you can choose anti-static tapered sleeve (black), surface resistance value≤ $10^6\Omega$.
- The bearing end cap consists of a precision ball bearing, a polymer housing and end cap seal. Combined they provide an attractive, smooth and quite running roller.
- The design of the end cap protects the bearings by providing excellent resistance to dust and splashed water.
- The roller is light, easy to start-up.
- The position of the grooves can be customized.
- The duty capacity of the roller depends on the drive capacity of the O-belt. The weight of single items to be conveyed should not exceed 30kg.
- Temperature range: -5℃ ~ 40℃.
- Humidity range: 30%~ 90% RH (non-condensation).

  Please contact us if humidity out of this scope.

Specifications

Bearing Unit	
Bearing housing	Polyamide, black
End cap	Polypropylene, Damon green
Precision ball bearing	6002



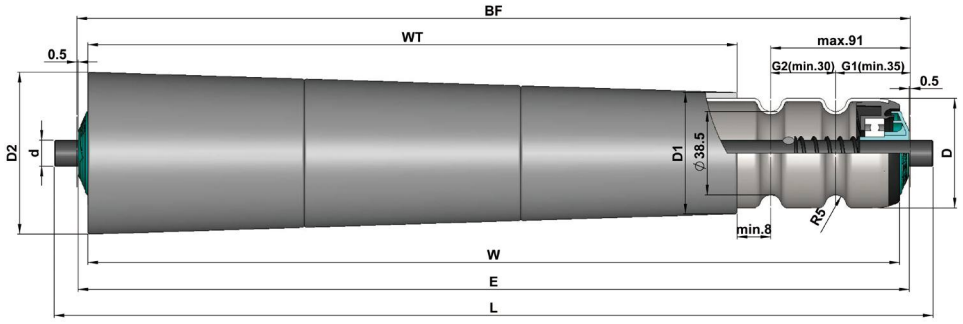

2640 Series Spring Loaded

Tube Dia.(D)	Shaft Dia.(d)				G1	G2
Φ50	Φ12/11hex	BF=W+10	E=W+9	L=W+31	35	30

Tube	D*T	WT	D1	D2	Shaft Dia.(d)	
					11hex	Φ12
Steel, zinc plated, tapered sleeve	Φ50x1.5	245	Φ55.6	Φ71	2.640.SHJ.AFA	2.640.SHJ.ACA
		295	Φ52.5	Φ71		
		345	Φ55.6	Φ77.3		
		395	Φ52.5	Φ77.3		
		445	Φ55.6	Φ83.6		
		495	Φ52.5	Φ83.6		
		545	Φ55.6	Φ89.9		
		595	Φ52.5	Φ89.9		
Steel, zinc plated, tapered sleeve (Static conductive version,black)		645	Φ55.6	Φ96.2	2.640.SHK.AFA	2.640.SHK.ACA
		695	Φ52.5	Φ96.2		
		745	Φ55.6	Φ102.5		
		795	Φ52.5	Φ102.5		
		845	Φ55.6	Φ108.8		
		895	Φ52.5	Φ108.8		
		945	Φ55.6	Φ115		
		995	Φ52.5	Φ115		
		1045	Φ55.6	Φ121.3		
		1095	Φ52.5	Φ121.3		

The taper sleeve length dimension (WT) is not accurate.

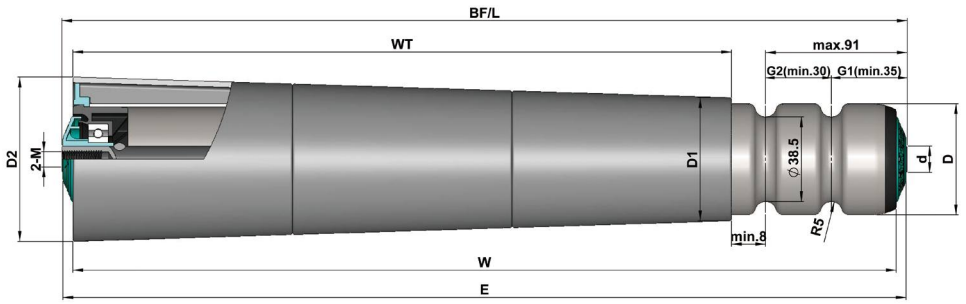

2640 Series Internal Thread

Tube Dia.(D)	Shaft Dia.(d)				G1	G2
Φ50	Φ12/15	BF=W+10	E=W+9	L=W+10	35	30

Tube	D*T	WT	D1	D2	Shaft Dia.(d)	
					Φ12 (M8x15)	Φ15 (M10x20)
Steel, Zinc-plated, tapered sleeve	Φ50x1.5	245	Φ55.6	Φ71	2.640.SHJ.ACC	2.640.SHJ.ADC
		295	Φ52.5	Φ71		
		345	Φ55.6	Φ77.3		
		395	Φ52.5	Φ77.3		
		445	Φ55.6	Φ83.6		
		495	Φ52.5	Φ83.6		
		545	Φ55.6	Φ89.9		
		595	Φ52.5	Φ89.9		
Steel, zinc plated, tapered sleeve (Static conductive version,black)		645	Φ55.6	Φ96.2	2.640.SHK.ACC	2.640.SHK.ADC
		695	Φ52.5	Φ96.2		
		745	Φ55.6	Φ102.5		
		795	Φ52.5	Φ102.5		
		845	Φ55.6	Φ108.8		
		895	Φ52.5	Φ108.8		
		945	Φ55.6	Φ115		
		995	Φ52.5	Φ115		
		1045	Φ55.6	Φ121.3		
		1095	Φ52.5	Φ121.3		

The taper sleeve length dimension (WT) is not accurate.





2660 Series

Double Groove O-Belt Pulley Tapered Sleeve Roller

Product Features

- Based on the 2260 Series, covered with grey polypropylene taper sleeve; abrasion resistant, low noise, shockproof.
- In the case of sensitive to static electricity, you can choose anti-static tapered sleeve (black), surface resistance value≤ $10^6\Omega$.
- The O-belt pulley is located on the head end of the roller which separates the drive area and the conveying area avoiding interference between the O-belt and the conveyed goods.
- The bearing end cap consists of a precision ball bearing, a polymer housing and end cap seal. Combined they provide an attractive, smooth and quite running roller.
- The design of the end cap protects the bearings by providing excellent resistance to dust and splashed water.
- Because there is no grooving on the tube, the tube will not have any distortion and the roller will run more smoothly.
- The duty capacity of the roller depends on the drive capacity of the O-belt. The weight of single items to be conveyed should not exceed 30kg.
- Temperature range: -5℃ ~ 40℃.
- Humidity range: 30%~ 90% RH (non-condensation).
  Please contact us if humidity out of this scope.

Specifications

Bearing Unit	
Bearing housing	Polyamide, black
End cap	Polypropylene, Damon green
Precision ball bearing	6002
Drive Element	
O-belt pulley	Polyamide, black

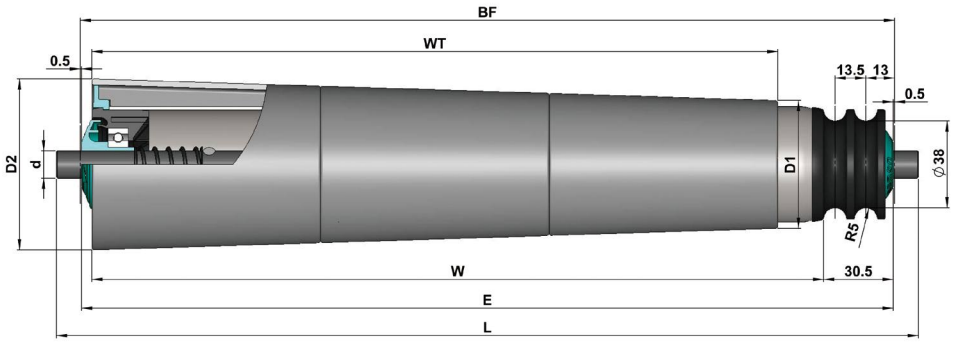

2660 Series Spring Loaded

Tube Dia.(D)	Shaft Dia.(d)			
Φ50	Φ12/11hex	BF=W+36	E=W+35	L=W+57

Tube	D*T	WT	D1	D2	Shaft Dia.(d)	
					11hex	Φ12
Steel, zinc plated, tapered sleeve	Φ50x1.5	245	Φ55.6	Φ71	2.660.SHJ.AFA	2.660.SHJ.ACA
		295	Φ52.5	Φ71		
		345	Φ55.6	Φ77.3		
		395	Φ52.5	Φ77.3		
		445	Φ55.6	Φ83.6		
		495	Φ52.5	Φ83.6		
		545	Φ55.6	Φ89.9		
		595	Φ52.5	Φ89.9		
Steel, zinc plated, tapered sleeve (Static conductive version,black)		645	Φ55.6	Φ96.2	2.660.SHK.AFA	2.660.SHK.ACA
		695	Φ52.5	Φ96.2		
		745	Φ55.6	Φ102.5		
		795	Φ52.5	Φ102.5		
		845	Φ55.6	Φ108.8		
		895	Φ52.5	Φ108.8		
		945	Φ55.6	Φ115		
		995	Φ52.5	Φ115		
		1045	Φ55.6	Φ121.3		
		1095	Φ52.5	Φ121.3		

The taper sleeve length dimension (WT) is not accurate.



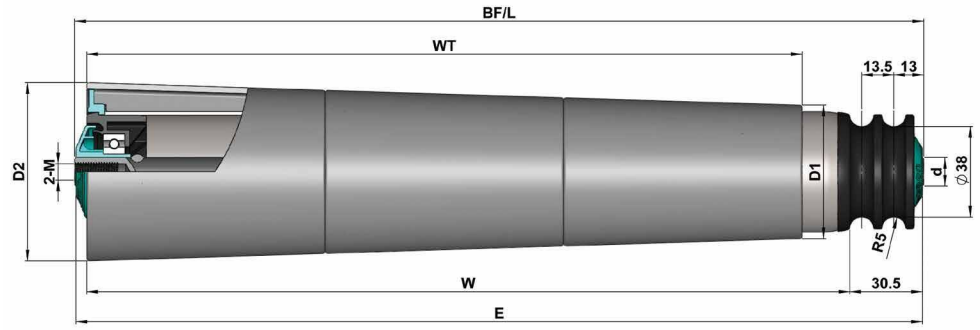

2660 Series Internal Thread

Tube Dia.(D)	Shaft Dia.(d)			
Φ50	Φ12/15	BF=W+36	E=W+35	L=W+36

Tube	D*T	WT	D1	D2	Shaft Dia.(d)	
					Φ12 (M8x15)	Φ15 (M10x20)
Steel, zinc plated, tapered sleeve	Φ50x1.5	245	Φ55.6	Φ71	2.660.SHJ.ACC	2.660.SHJ.ADC
		295	Φ52.5	Φ71		
		345	Φ55.6	Φ77.3		
		395	Φ52.5	Φ77.3		
		445	Φ55.6	Φ83.6		
		495	Φ52.5	Φ83.6		
		545	Φ55.6	Φ89.9		
		595	Φ52.5	Φ89.9		
Steel, zinc plated, tapered sleeve (Static conductive version,black)		645	Φ55.6	Φ96.2	2.660.SHK.ACC	2.660.SHK.ADC
		695	Φ52.5	Φ96.2		
		745	Φ55.6	Φ102.5		
		795	Φ52.5	Φ102.5		
		845	Φ55.6	Φ108.8		
		895	Φ52.5	Φ108.8		
		945	Φ55.6	Φ115		
		995	Φ52.5	Φ115		
		1045	Φ55.6	Φ121.3		
		1095	Φ52.5	Φ121.3		

The taper sleeve length dimension (WT) is not accurate.



2650 Series

Poly-Vee Tapered Sleeve Roller

Product Features

- Based on the 2250 Series, covered with grey polypropylene taper sleeve; abrasion resistant, low noise, shockproof.
- In the case of sensitive to static electricity, you can choose anti-static tapered sleeve (black), surface resistance value≤ $10^6\Omega$.
- The poly-vee pulley is located on the head end of the roller which separates the drive area and the conveying area avoiding interference between the poly-vee belt and the conveyed goods.
- The bearing end cap consists of a precision ball bearing, a polymer housing and end cap seal. Combined they provide an attractive, smooth and quite running roller.
- The design of the end cap protects the bearings by providing excellent resistance to dust and splashed water.
- ISO9982 PJ series poly-vee. Total of 9 grooves at 2.34mm pitch.
- The duty capacity of the roller depends on the type of poly-vee belt and transmission layout. The weight of single items to be conveyed should not exceed 50kg.
- The roller is light, easy start-up.
- Temperature range: -5℃ ~ 40℃.
- Humidity range: 30%~ 90% RH (non-condensation).
  Please contact us if humidity out of this scope.

Specifications

Bearing Unit	
Bearing housing	Polyamide, black
End cap	Polypropylene, Damon green
Precision ball bearing	6002
Drive Element	
Poly-vee pulley	Polyamide, black

Optional Poly-vee belt



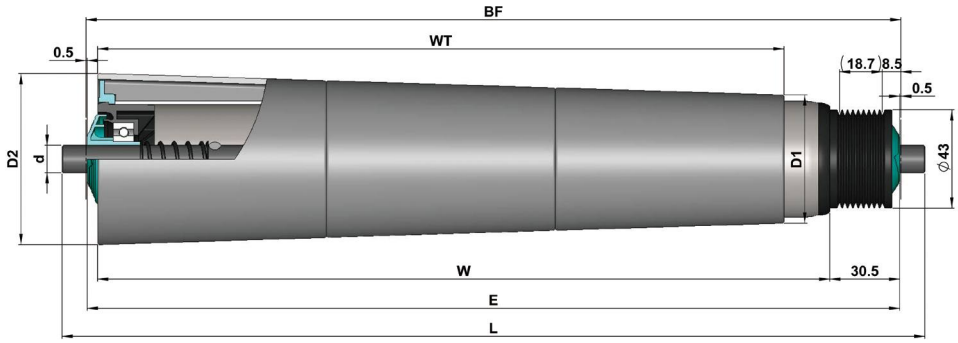

2650 Series Spring Loaded

Tube Dia.(D)	Shaft Dia.(d)			
Φ50	Φ12/11hex	BF=W+36	E=W+35	L=W+57

Tube	D*T	WT	D1	D2	Shaft Dia.(d)	
					11hex	Φ12
Steel, zinc plated, tapered sleeve	Φ50x1.5	245	Φ55.6	Φ71	2.650.SHJ.AFA	2.650.SHJ.ACA
		295	Φ52.5	Φ71		
		345	Φ55.6	Φ77.3		
		395	Φ52.5	Φ77.3		
		445	Φ55.6	Φ83.6		
		495	Φ52.5	Φ83.6		
		545	Φ55.6	Φ89.9		
		595	Φ52.5	Φ89.9		
Steel, zinc plated, tapered sleeve (Static conductive version,black)		645	Φ55.6	Φ96.2	2.650.SHK.AFA	2.650.SHK.ACA
		695	Φ52.5	Φ96.2		
		745	Φ55.6	Φ102.5		
		795	Φ52.5	Φ102.5		
		845	Φ55.6	Φ108.8		
		895	Φ52.5	Φ108.8		
		945	Φ55.6	Φ115		
		995	Φ52.5	Φ115		
		1045	Φ55.6	Φ121.3		
		1095	Φ52.5	Φ121.3		

The taper sleeve length dimension (WT) is not accurate.

⚠ Please choose the steel Poly-Vee roller when you must use 4PJ belt.

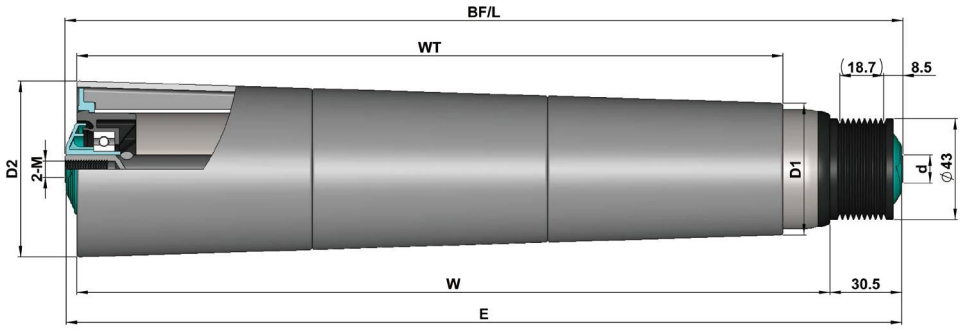

2650 Series Internal Thread

Tube Dia.(D)	Shaft Dia.(d)			
Φ50	Φ12/15	BF=W+36	E=W+35	L=W+36

Tube	D*T	WT	D1	D2	Shaft Dia.(d)	
					Φ12 (M8x15)	Φ15 (M10x20)
Steel, zinc plated, tapered sleeve	Φ50x1.5	245	Φ55.6	Φ71	2.650.SHJ.ACC	2.650.SHJ.ADC
		295	Φ52.5	Φ71		
		345	Φ55.6	Φ77.3		
		395	Φ52.5	Φ77.3		
		445	Φ55.6	Φ83.6		
		495	Φ52.5	Φ83.6		
		545	Φ55.6	Φ89.9		
		595	Φ52.5	Φ89.9		
Steel, zinc plated, tapered sleeve (Static conductive version,black)		645	Φ55.6	Φ96.2	2.650.SHK.ACC	2.650.SHK.ADC
		695	Φ52.5	Φ96.2		
		745	Φ55.6	Φ102.5		
		795	Φ52.5	Φ102.5		
		845	Φ55.6	Φ108.8		
		895	Φ52.5	Φ108.8		
		945	Φ55.6	Φ115		
		995	Φ52.5	Φ115		
		1045	Φ55.6	Φ121.3		
		1095	Φ52.5	Φ121.3		

The taper sleeve length dimension (WT) is not accurate.

⚠ Please choose the steel Poly-Vee roller when you must use 4PJ belt.



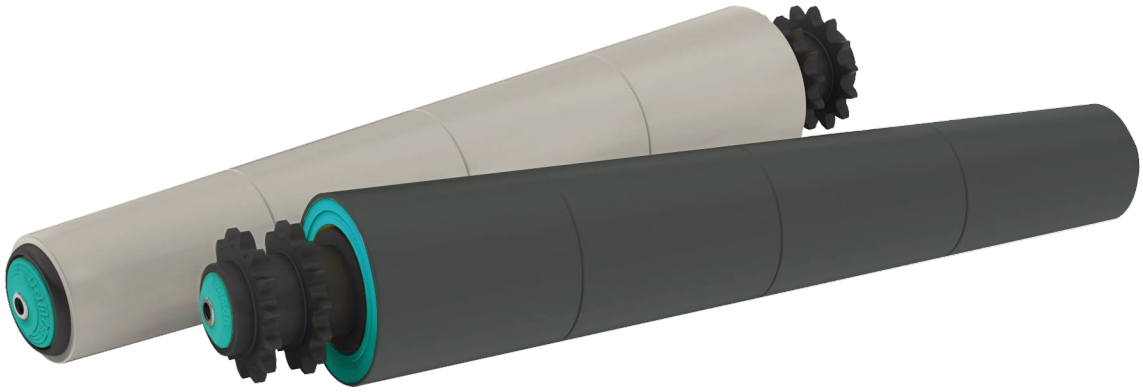

2624 Series

Polymer Sprocket Tapered Sleeve Roller

Product Features

- Based on the 2224 Series, covered with grey polypropylene taper sleeve; abrasion resistant, low noise, shockproof.
- In the case of sensitive to static electricity, you can choose anti-static tapered sleeve (black), surface resistance value≤ $10^6\Omega$.
- Using the polyamide sprocket roller as the drive element reduces the running noise.
- The bearing end cap consists of a precision ball bearing, a polymer housing and end cap seal. Combined they provide an attractive, smooth and quite running roller.
- The design of the end cap protects the bearings by providing excellent resistance to dust and splashed water.
- To avoid abrasion between the sprocket and chain, the angle between tapered rollers should not exceed 5° .
- The weight of single items to be conveyed should not exceed 50kg.
- Temperature range: −5℃ ~ 40℃.
- Humidity range: 30%~ 90% RH (non-condensation).

  Please contact us if humidity out of this scope.

Specifications

Bearing Unit	
Bearing housing	Polyamide, black
End cap	Polypropylene, Damon green
Precision ball bearing	6002
Drive Element	
Sprocket	Polyamide, black

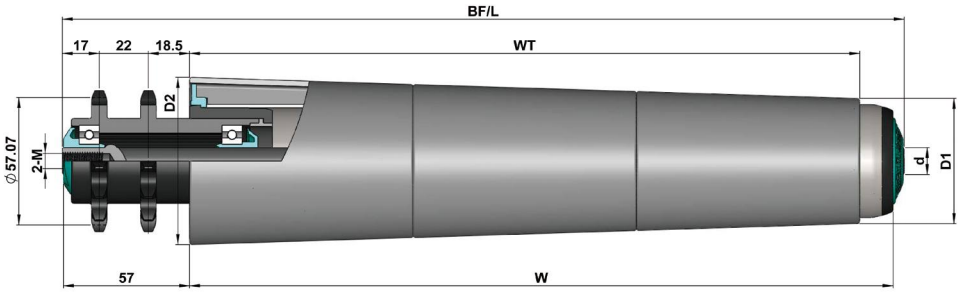

2624 Series Female Thread

Tube Dia.(D)	Shaft Dia.(d)			Sprocket type
Φ50	Φ12/15	BF=W+63	L=W+63	08B14T

Tube	D*T	WT	D1	D2	Shaft Dia.(d)	
					Φ12 (M8x15)	Φ15 (M10x20)
Steel, zinc plated, tapered sleeve	Φ50x1.5	245	Φ55.6	Φ71	2.624.SHJ.ACC	2.624.SHJ.ADC
		295	Φ52.5	Φ71		
		345	Φ55.6	Φ77.3		
		395	Φ52.5	Φ77.3		
		445	Φ55.6	Φ83.6		
		495	Φ52.5	Φ83.6		
		545	Φ55.6	Φ89.9		
		595	Φ52.5	Φ89.9		
Steel, zinc plated, tapered sleeve (Static conductive version,black)		645	Φ55.6	Φ96.2	2.624.SHK.ACC	2.624.SHK.ADC
		695	Φ52.5	Φ96.2		
		745	Φ55.6	Φ102.5		
		795	Φ52.5	Φ102.5		
		845	Φ55.6	Φ108.8		
		895	Φ52.5	Φ108.8		
		945	Φ55.6	Φ115		
		995	Φ52.5	Φ115		
		1045	Φ55.6	Φ121.3		
		1095	Φ52.5	Φ121.3		

The taper sleeve length dimension (WT) is not accurate.





1500 Series

Gravity Steel Tapered Roller

Product Features

- All steel tube, more sturdy and durable.
- Precision ball bearings and polyamide bearing housing interior and outside design make up the key bearing assembly, which is not only beautiful,more importantly, the roller runs more quietly.
- The design of the polyamide end cap of the roller can prevent the damage of dust and splashing water to the bearing to a certain extent.
- Tube standard taper 3.6° (taper can be customized).
- Usually, the weight of the goods suitable for transportation is not more than 200kg.
- Temperature range: −5℃~+40℃.
- Humidity range: 30% ~ 90% RH (non−condensation).
  Please contact us if humidity out of this scope.

Specifications

Bearing Unit	
Bearing housing	Polyamide black
End cap	Polypropylene, Damon green
Precision ball bearing	6002

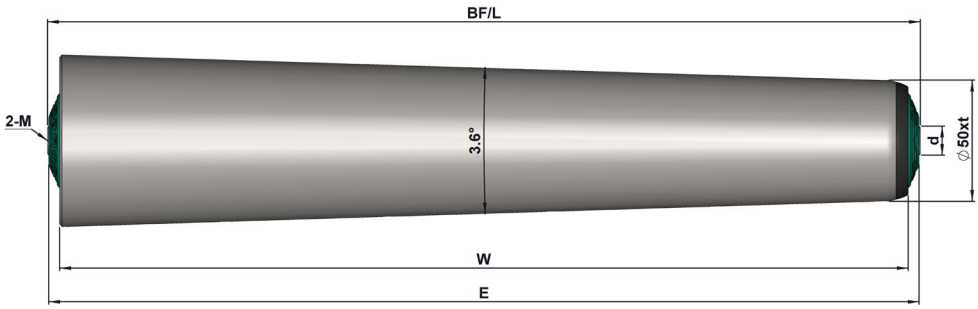

1500 Series Internal Thread

Tube Dia.(D)	Shaft Dia.(d)			
Φ50	Φ12/15	BF=W+10	E=W+9	L=W+10

Tube	D*T	Shaft Dia.(d)	
		Φ12 (M8x15)	Φ15 (M10x20)
Steel, zinc plated	Φ50x2.0	1.500.JWB.ACC	1.500.JWB.ADC
SS		1.500.NWC.BCC	1.500.NWC.BCC

If used in high and low temperature or special environment, please specify clearly.

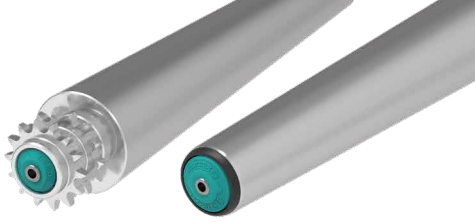

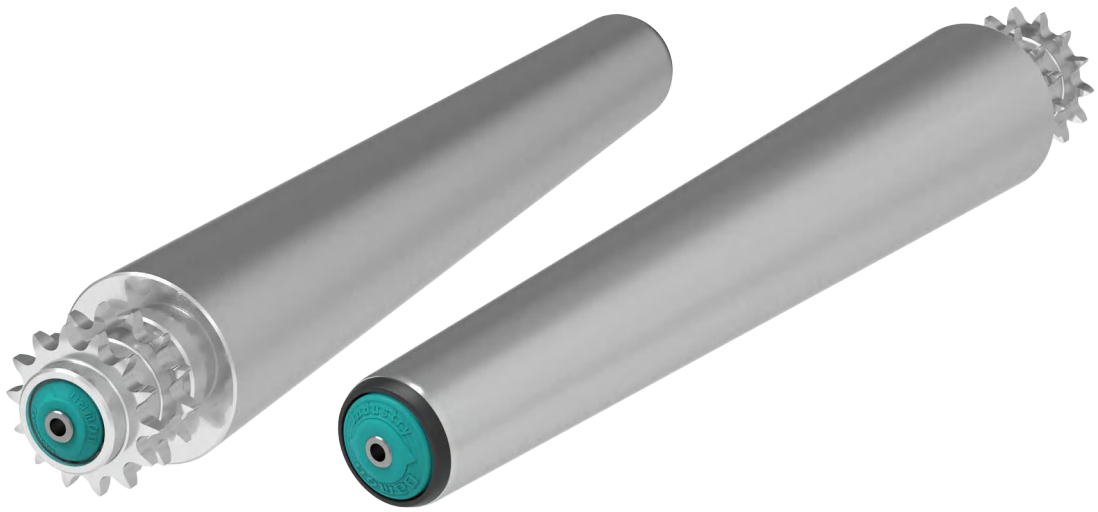

2521 Series

Sprocket Steel Tapered Roller

Product Features

- All steel cylinder, more sturdy and durable.
- The steel sprocket is welded with the tube, so that it can deliver higher torque and meet the requirements of medium and heavy load transmissi −on.
- The design of the polyamide end cap of the roller can prevent the damage of dust and splashing water to the bearing to a certain extent.
- Tube standard taper 3.6° (taper can be customized).
- In order to achieve more rational turning performance, sprocket tooth
- thickness is slightly smaller than the conventional.
- Usually, the weight of the goods suitable for transportation is not more than 200kg.
- Temperature range: −5℃~+40℃.
- Humidity range: 30%~ 90% RH (non−condensation).

  Please contact us if humidity out of this scope.

Specifications

Bearing Unit	
Bearing housing	Polyamide black
End cap	Polypropylene, Damon green
Precision ball bearing	6002

Drive Element	
Sprocket	Steel

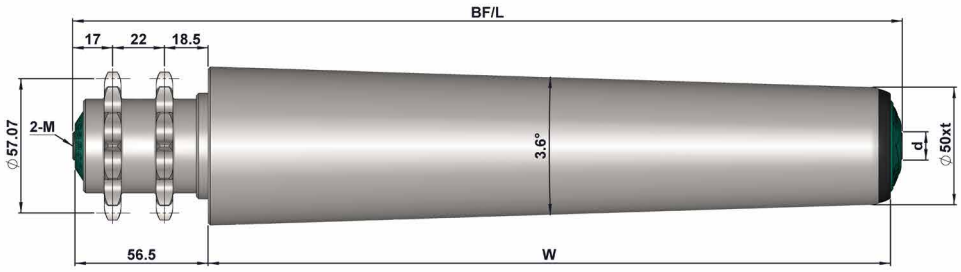

2521 Series Internal Thread

Tube Dia.(D)	Shaft Dia.(d)			Sprocket type
Φ50	Φ12/15	BF=W+63	L=W+63	08B14T

Tube	D*T	Shaft Dia.(d)	
		Φ12 (M8x15)	Φ15 (M10x20)
Steel, zinc plated	Φ50x2.0	2.521.JWB.ACC	2.521.JWB.ADC
SS		2.521.NWC.BCC	2.521.NWC.BDC

If used in high and low temperature or special environment, please specify clearly.



Ball Transfer



Transfer Ball

1.Allows conveying in all directions.

2.Simple construction, smooth running.

3.Depending on the environment, options are available for stainless steel or other material.

4.The bottom of goods must be flat and rigid.

5.Lubricating oil is required in operation.



WA-01-A



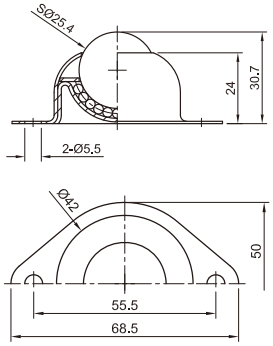

Body & surface	Steel, zinc plated
Ball material	Q235
Static load(kg)	25
Dynamic load(kg)	30
Weight(g)	142

WA-01-B



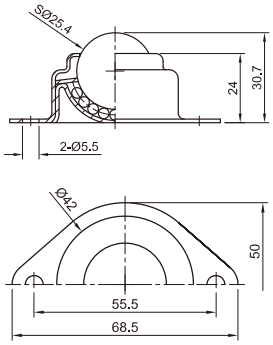

Body & surface	Stainless steel, 304
Ball material	Stainless steel, 202
Static load(kg)	25
Dynamic load(kg)	30
Weight(g)	136

WA-01-C



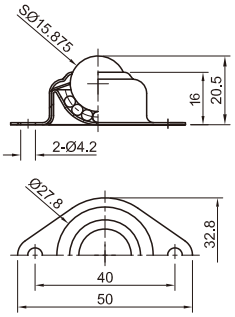

Body & surface	Steel, zinc plated
Ball material	Q235
Static load(kg)	15
Dynamic load(kg)	20
Weight(g)	38

WA-02



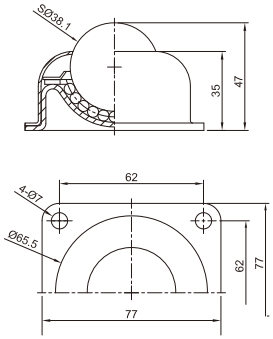

Body & surface	Steel, zinc plated
Ball material	Q235
Static load(kg)	90
Dynamic load(kg)	110
Weight(g)	480

WB-01



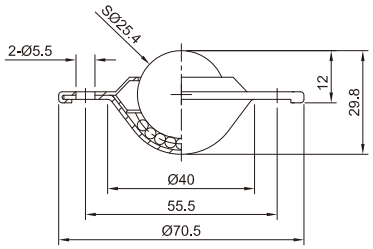

Body & surface	Steel, zinc plated
Ball material	Q235
Static load(kg)	45
Dynamic load(kg)	55
Weight(g)	147

WC-02-T



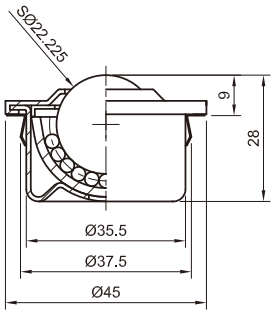

Body & surface	Steel, zinc plated
Ball material	Q235
Static load(kg)	40
Dynamic load(kg)	50
Weight(g)	126

WC-03



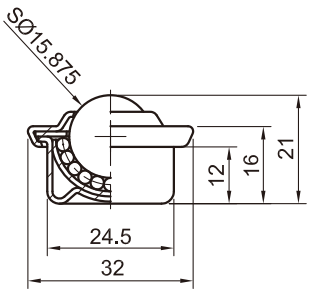

Body & surface	Steel, zinc plated
Ball material	Q235
Static load(kg)	15
Dynamic load(kg)	17
Weight(g)	44

WD-01



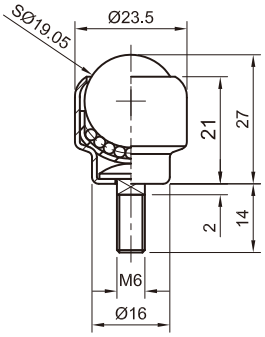

Body & surface	Steel, zinc plated
Ball material	Q235
Static load(kg)	30
Dynamic load(kg)	40
Weight(g)	50



WD-02



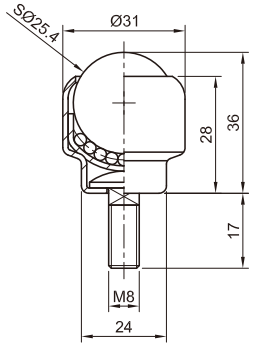

Body & surface	Steel, zinc plated
Ball material	Q235
Static load(kg)	40
Dynamic load(kg)	50
Weight(g)	117

WD-03



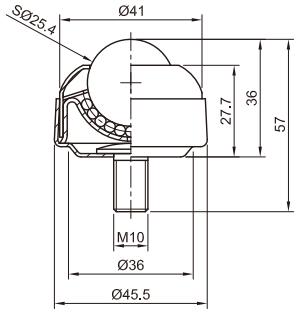

Body & surface	Steel, zinc plated
Ball material	Q235
Static load(kg)	40
Dynamic load(kg)	50
Weight(g)	171

Skate Wheel



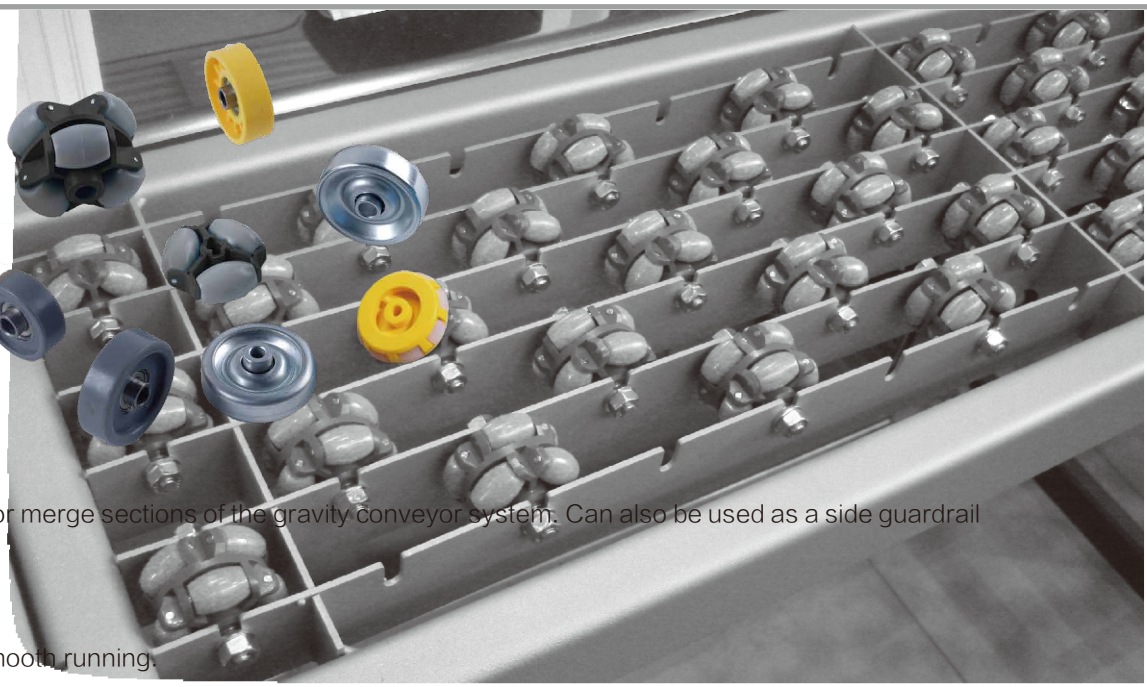

Skate Wheel

1.Can be used in curves or merge sections of the gravity conveyor system. Can also be used as a side guardrail or guide.

2.Small and light weight.

3.Simple construction, smooth running.

4.Depending on the environment, options are available for steel or plastic wheels.

5.The bottom of goods must be flat and rigid.

GD Series

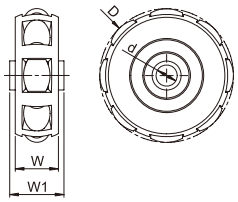

Series	Mateiral	d	D	W	W1	Static load(kg)	Dynamic load (kg)	Weight (g)
GD-01A-8	POM+PA6	Φ8.3	Φ51	16.5	20.5	8	10	29
GD-02A-12		Φ12.3	Φ51	16.5	20.5			27
GD-01B-10		Φ10.2	Φ51	16.5	16.5			27
GD-01C-13		Φ13.5	Φ51	16.5	16.5			26
GD-02-13K		Φ13	Φ51	16.5	16.5			25
GD-02E-6		Φ6.5	Φ51	16.5	16.5			26
GD-03A-10		Φ10.5	Φ40	15	15			14
GD-03C-10		Φ10	Φ30	12	12			7



GD-01A-8/GD-02A-12



GD-01B-10/GD-02E-6



GD-02-13K



GD-01C-13/GD-03A-10



GD-03C-10



GA-01 Series



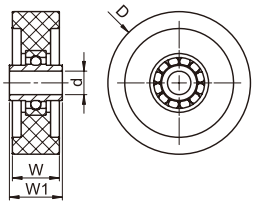

Series	Material	d	D	W	W1	Static load(kg)	Dynamic load(kg)	Weight (g)
GA-01-8	ABS	Φ8.1	Φ48.5	16	18	40	60	35
GA-01A-8	ABS	Φ8.1	Φ38	14.3	18	35	50	26

GA-02 Series



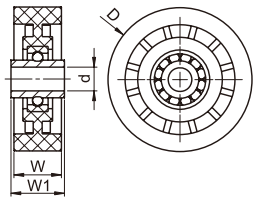

Series	Material	d	D	W	W1	Static load(kg)	Dynamic load(kg)	Weight (g)
GA-02-8	ABS	Φ8.1	Φ48.5	16	18	40	60	30

GB Series



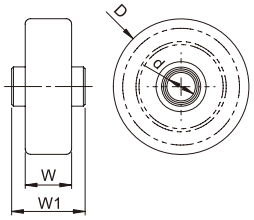

Series	Material	d	D	W	W1	Static load(kg)	Dynamic load(kg)	Weight (g)
GB-02A-8	Steel, zinc plated	Φ8.1	Φ49	14.5	20.6	10	15	66

WH Series



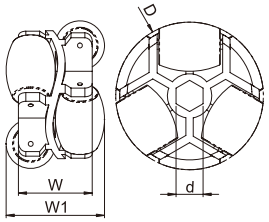

Series	Material	d	D	W	W1	Static load(kg)	Dynamic load(kg)	Weight (g)
WH-01-11hex	Reinforced nylon	11hex	Φ60	30	40	25	25	75
WH-02-12		Φ12	Φ60	30	40	25	25	75

WE Series

Two combinations



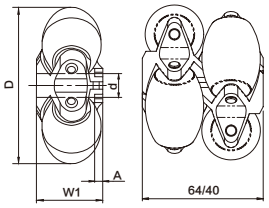

Series	Material	d	D	W1	A	Static load(kg)	Dynamic load(kg)	Weight (g)
WE-01-12	PA66	Φ12.5	Φ80	34	4	25	25	100
WE-02-8	PA66	Φ8.3	Φ48	21.5	3	10	10	20

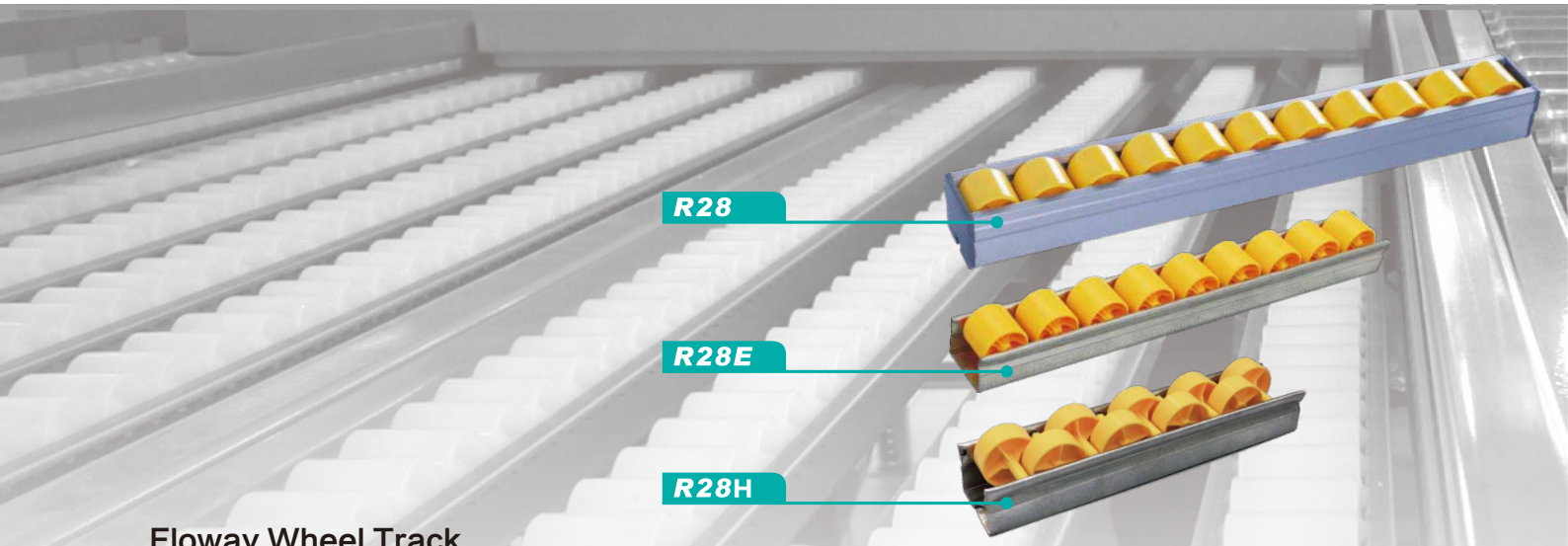

Floway Wheel Track

1.General used for carton live storage (CLS) applications. Can also be used as a conveyor side guardrail or guide.

2.Simple construction, smooth running.

3.When used in a decline application, the angle depends on the weight and bottom surface of the goods. Typical angle 3 - 6° .

4.Typically supported with a frame every 600 – 800mm.

R28

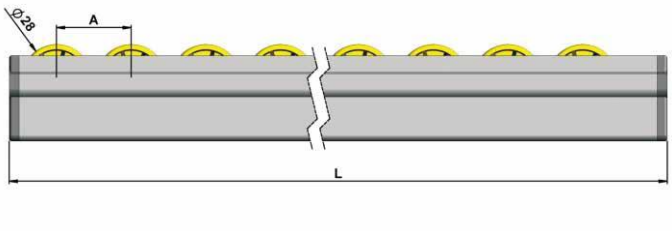

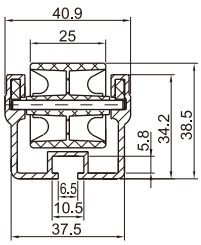

Frame	Aluminum
Wheel	ABS
Load	12.5kg/m
Whell picth	A=30/45mm
Part No.	R28-A-L

R28E

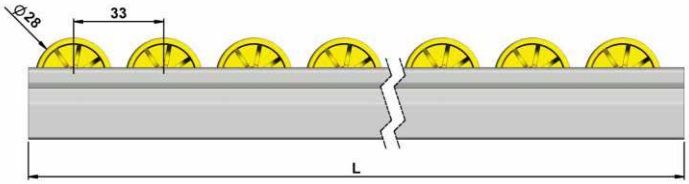

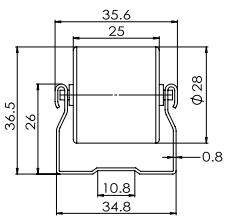

Frame	Steel, zinc-plated
Wheel	ABS
Load	12.5kg/m
Part No.	R28E-L

Anti-static is available (black wheel)

R28H

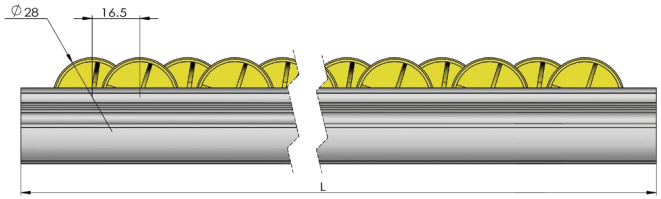

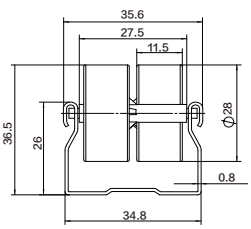

Frame	Steel, zinc-plated
Wheel	ABS
Load	12.5kg/m
Part No.	R28H-L



Adjustable Foot

1.Threaded height adjustment. Used to level or adjust the height or incline of a conveyor.

2.Manufactured from zinc plated steel. Stainless steel options available.



BA Series



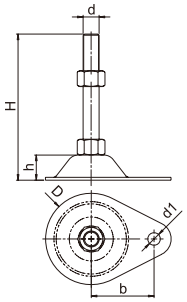

Type	d	D	H	h	b	d1	Load(kg)	Weight(g)
BA-14	M14	Φ80	128	22	55	Φ11	160	290
BA-16	M16	Φ80	156	22	55	Φ11	180	367

BB Series



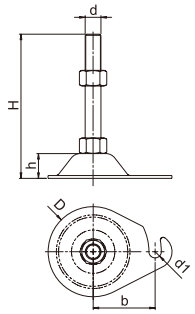

Type	d	D	H	h	b	d1	Load(kg)	Weight(g)
BB-14	M14	Φ80	128	22	55	Φ11	160	295
BB-16	M16	Φ80	156	22	55	Φ11	180	363

BJ Series



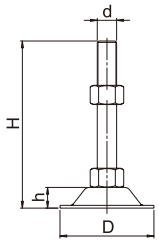

Type	d	D	H	h	Load(kg)	Weight(g)
BJ-12	M12	Φ68	116	15	80	153
BJ-16	M16	Φ68	148	14	140	293

BF Series



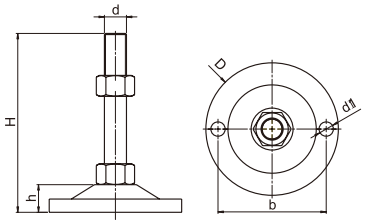

Type	d	D	H	h	b	d1	Load(kg)	Weight(g)
BF-20	M20	Φ120	162	25	98	Φ12	300	1400

ZHEJIANG DAMON INDUSTRIAL EQUIPMENT CO., LTD

Address: Shangqiang Industrial Park, Daixi, Huzhou,China

Tel.: +86-0572-3826 065/066

Email: sales@damonroller.com

Website: www.damonroller.com

Linkedin

Australia

DAMON Australia
Address：30 Grasslands Avenue Craigieburn VIC 3064,Australia
Tel: +61-393337034
Fax: +61-393084896
Email: info@damon-group.com.au
Web: www.damon-group.com.au

Romania

DAMON Industrial Europe Srl
Address:Apahida,Libertatii Str.,No.21,407035,Cluj, Romania
Tel: +40-364130050
Email: sales@damonroller.ro
Web: www.damonroller.com

America

DA Roller Corporation
Address: 4664 Brate Dr, Suite 400，West Chester, Oh 45011, USA.
Tel: +1-5138981850
Email: info@daroller.com
Web: www.daroller.com

Japan

Kyowa Manufacturing Co., Ltd.
Address: 570-10 Kubota-cho, Kasai-city, Hyogo pref. 675-2364 JAPAN
Tel : +81-790420601
Fax: +81-790424895
Email: sales@pulseroller.com
Web: www.pulseroller.com

India

Damonroller India Private Ltd.
Address: A-208, Exellaa Plazzo, Katraj Baypass Road, Ambegaon Bk, Pune, Maharashtra, INDIA
Tel: +91-8484005701
Email: sales.india@damonroller.com

Indonesia

PT. Rollflex Manufacturing Indonesia
Address: Taman Tekno BSD, Sektor XI Blok H-11 No. 7 Serpong, Tangerang 15314
Tel: +62-21-36720399
Fax: +62-21-36720388
Email: sales.id@rollflexmfg.com
Web: www.rollflexmfg.com

Malaysia/Singapore

Rollflex (M) Sdn.Bhd.
Address: Lot58908, No.3399, Jalan Pekeliling Tanjung 27/2 Kawasan Perindustrian Indahpura, 81000 Kulai, Johor, Malaysia.
Tel: +60-12-7272896
Email: sales.my@rollflexmfg.com
Web: www.rollflexmfg.com

Turkey

ZETA Automation Ltd. Co.
Address: İkitelli OSB, Mutsan 4. Blok No:34, İkitelli /İstanbul, Turkey
Tel: +90-212-4855700
Fax: +90-212-485 5755
Email: sales@zetaotomasyon.com
Web: www.zetaotomasyon.com

Because the printed copy is updated slowly,
so for the newest product informations, pls refer to the official website.